W–1	WATER MANHOLE FRAME AND COVER
W–2	FIRE HYDRANT SETTING DETAIL
W–2a	ALTERNATE FIRE HYDRANT SETTING DETAIL
W–2b	ALTERNATE FIRE HYDRANT SETTING DETAIL
W–3	CAP AND BLOWOFF
W–4	ANCHOR BLOCK
W–5	ADJUSTMENT OF WATER AND/OR GAS VALVES DETAIL
W–6	METHOD OF ANCHORING VALVE TO TEE WITH "DUC–LUGS"
W–6a	ALTERNATE METHOD OF ANCHORING VALVE TO TEE WITH MECHANICAL JOINT RETAINER GLAND
W–6b	"MEGALUG" ALTERNATE METHOD OF ANCHORING VALVE TO TEE
W–7	TAPPING SLEEVE AND VALVE EXCAVATION
W–8	DEWATERING DEVICE
W–9	METER SETTINGS SERVICE THROUGH FLOOR
W–9a	METER SETTINGS SERVICE THROUGH WALL
W–9b	METER SETTINGS SERVICE THROUGH FLOOR AND SERVICE THROUGH WALL GENERAL NOTES

W–9c	METER SETTINGS RESIDENTIAL WATER SERVICE AND FIRE LINE FOR SPRINKLERS
W–10	WATER HOUSE CONNECTION FOR INSIDE DWELLING METER
W–10a	STANDARD INSTALLATION 3/4" METERED DOMESTIC SERVICE
W–10b	DOUBLE WATER HOUSE CONNECTION FOR INSIDE DWELLING METER
W–10b Cont.	DOUBLE WATER HOUSE CONNECTION PLAN VIEW
W–10c	TAP SIZES AND PIPE CLASS FOR WATER HOUSE CONNECTIONS
W–11	(OPEN)
W–12	(OPEN)
W–13	STANDARD INSTALLATION 2", 3", 4", 6", 8" AND 10" WATER SUPPLY SERVICE 2", 3", 4", 6", 8" AND 10" COMBINED SERVICE PLAN
W–13a	STANDARD INSTALLATION 2", 3", 4", 6", 8" AND 10" WATER SUPPLY SERVICE 2", 3", 4", 6", 8" AND 10" COMBINED SERVICE SECTION A–A
W–13b	SPLIT TOP DETAILS WATER METER INSTALLATION 2", 3", 4", 6", 8" AND 10" METERS
W–13c	TABLE OF VALUES WATER METER INSTALLATION 2", 3", 4", 6", 8" AND 10" METERS
W–13d	GENERAL NOTES WATER METER INSTALLATION 2", 3", 4", 6", 8" AND 10" METERS
W–14	TYPICAL WATER MAIN VERTICAL OFFSET TYING DETAIL

W–15	BUTTRESS FOR TEES
W–15a	BUTTRESS FOR COMPACT TEES
W–16	BUTTRESS FOR CAPS
W–17	BUTTRESS FOR HORIZONTAL AND VERTICAL BENDS
W–17a	BUTTRESS FOR HORIZONTAL AND VERTICAL BENDS – TABLE OF VALUES
W–18	ANCHORAGE – 1/32 BEND UPPER VERTICAL STANDARD AND COMPACT FITTINGS
W–18a	TABLE OF VALUES ANCHORAGE – 1/32 BEND UPPER VERTICAL STANDARD AND COMPACT FITTINGS
W–19	ANCHORAGE – 1/16 BEND UPPER VERTICAL STANDARD AND COMPACT FITTINGS
W–19a	TABLE OF VALUES ANCHORAGE – 1/16 BEND UPPER VERTICAL STANDARD AND COMPACT FITTINGS
W–20	ANCHORAGE – 1/8 BEND UPPER VERTICAL STANDARD AND COMPACT FITTINGS
W–20a	TABLE OF VALUES ANCHORAGE – 1/8 BEND UPPER VERTICAL STANDARD AND COMPACT FITTINGS
W–21	(OPEN)
W–22	(OPEN)
W–23	(OPEN)
W–24	BUTTRESSES FOR 1/4 HORIZONTAL BENDS STANDARD AND COMPACT FITTINGS

W–25	AIR RELEASE VALVE MANHOLE
W–26	SPECIAL AIR RELEASE VALVE
W–27	STANDARD CONCRETE VALVE VAULT FOR 16”– 24” VALVES
W–27a	STANDARD CONCRETE VALVE VAULT EXTENSION STEM DETAIL
W–28	METHOD OF TESTING WATER MAINS
W–29	EXTENSION STEMS AND VALVE BOXES FOR DEEP VALVE SETTINGS
W–29a	EXTENSION STEMS AND VALVE BOXES FOR DEEP VALVE SETTINGS DETAILS AND TABLE OF VALUES
W–29b	EXTENSION STEMS AND VALVE BOXES FOR DEEP VALVE SETTINGS GENERAL NOTES
W–29c	VALVE EXTENSION STEM FOR CITY VALVE BOXES
W–30	WATER VALVE TIE STANDARD SHEET BLANK
W–30a	WATER VALVE TIE STANDARD SHEET SPECIFICATIONS
W–30b	WATER VALVE TIE STANDARD SHEET SAMPLE DRAWING
W–30c	WATER VALVE TIE DRAWING AND LETTERING SPECIFICATIONS
W–30d (1 OF 3)	WATER VALVE TIE STANDARD SHEET – GENERAL NOTES
W–30d Cont. (2 OF 3)	WATER VALVE TIE STANDARD SHEET – GENERAL NOTES

W-30d cONT. (3 OF 3)	WATER VALVE TIE STANDARD SHEET - GENERAL NOTES
W-30e (1 OF 5)	WATER VALVE TIE STANDARD PEN AND LETTERING SIZES
W-30e Cont. (2 OF 5)	WATER VALVE TIE STANDARD DRAFTING SYMBOLS
W-30e Cont. (3 OF 5)	WATER VALVE TIE STANDARD DRAFTING SYMBOLS
W-30e Cont. (4 OF 5)	WATER VALVE TIE STANDARD ABBREVIATIONS
W-30e Cont. (5 OF 5)	WATER VALVE TIE STANDARD ABBREVIATIONS

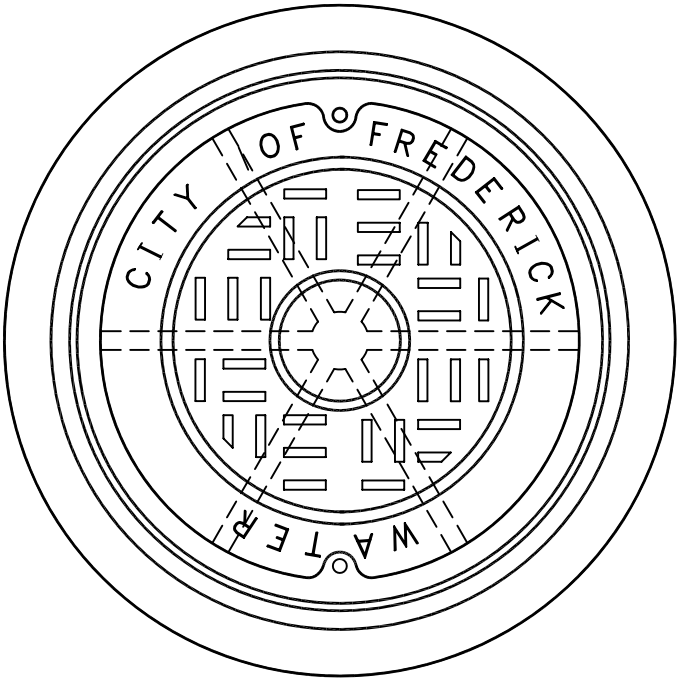

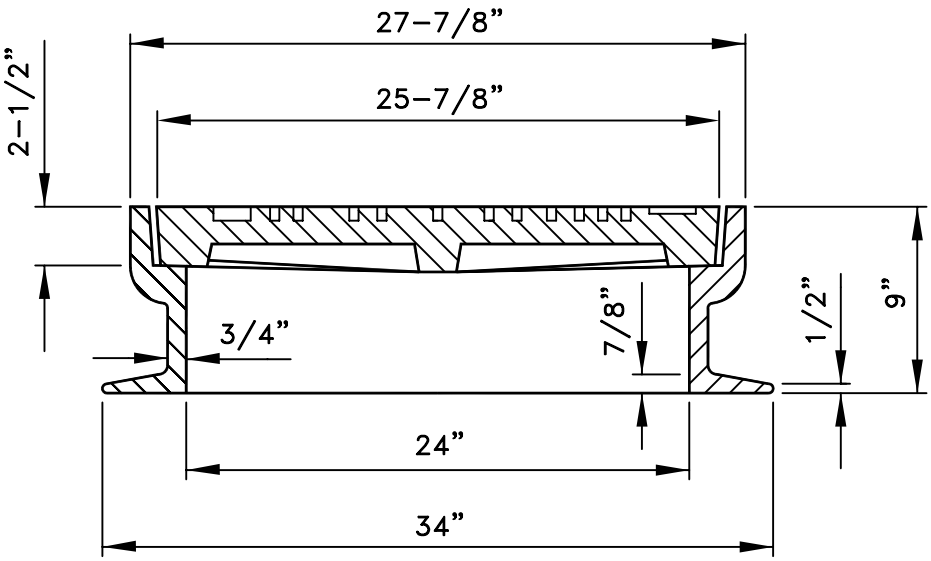

NOTES:

1. Material To Be Cast Iron ASTM A-48 Class 30.
2. Heavy Duty Manhole Frame And Cover Designed For H-20 Loading: Frame - (9") 250 Lbs. Cover - 170 Lbs.
3. Frame To Be Furnished With (4) 1" ϕ Flange Holes Located 90 Degrees Apart On A 30-1/4" Bolt Circle.
4. Manufactured By B & C Utility Supply, Inc., Finksburg, Maryland Or Approved Equal.
5. Manholes Within Flood Prone Areas Shall Be Water Tight.

CITY OF FREDERICK

Stan Aldridge 7-16-99

APPROVED DATE

HEAVY DUTY
WATER MANHOLE
FRAME AND COVER

REVISIONS:

DRAWN BY: KAT

SCALE: NONE

W-1

CAD

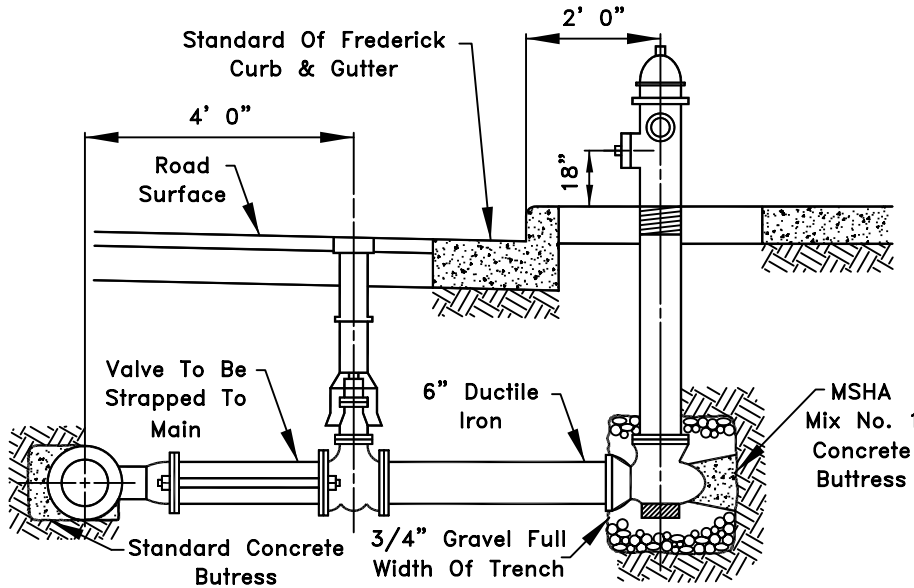

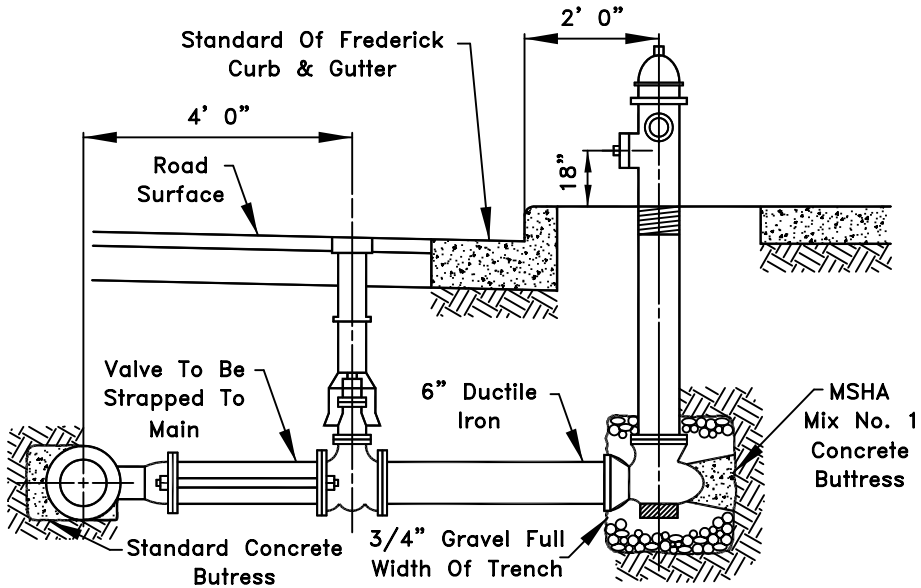

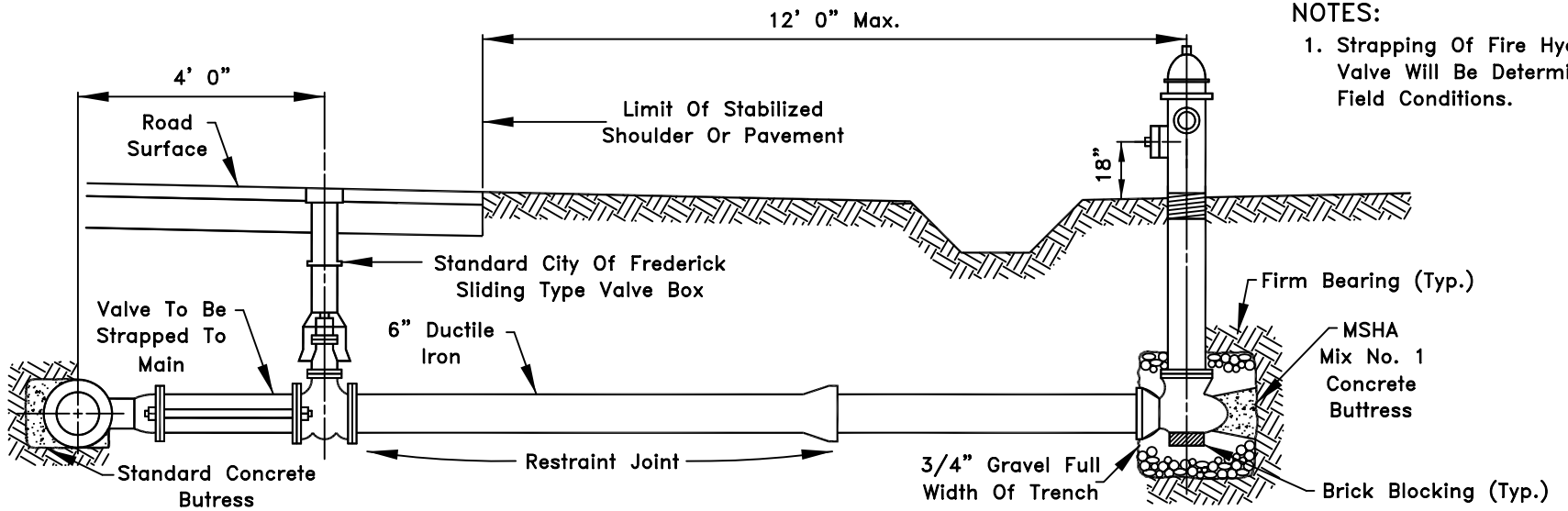

NOTES:

1. Strapping Of Fire Hydrant To Valve Will Be Determined By Field Conditions.

W-2	DRAWN BY: KAT SCALE: NONE	REVISIONS:		FIRE HYDRANT SETTING DETAIL	CITY OF FREDERICK Stan Aldridge 7-16-99 APPROVED DATE

CAD

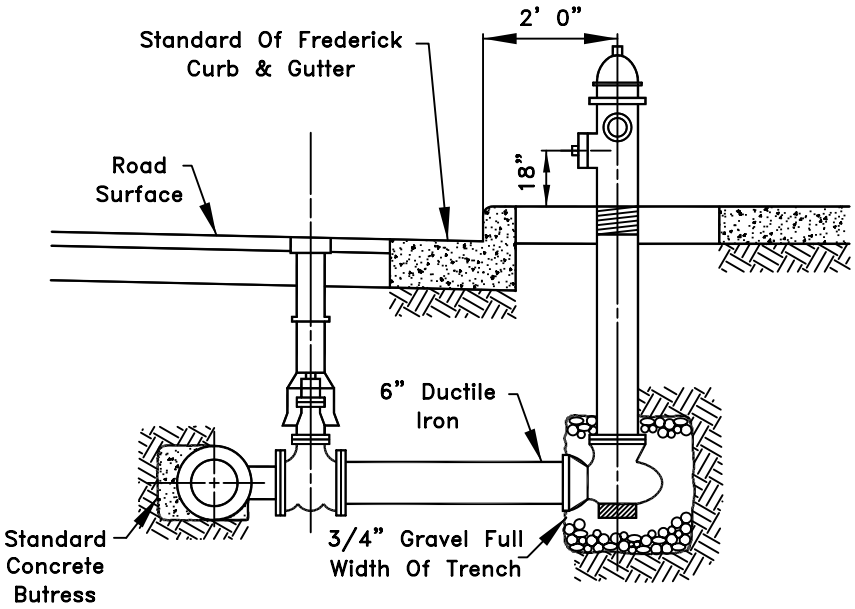

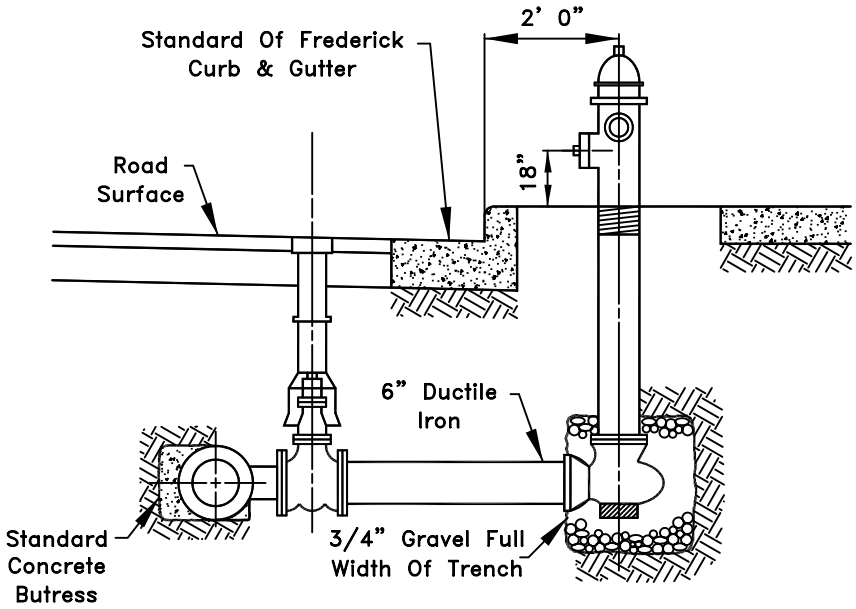

NOTES:

1. Strapping Of Fire Hydrant To Valve Will Be Determined By Field Conditions.
2. All Fire Hydrants Shall Be 5' Bury Depth. Adjustments To Grade Shall Be Made With Extension Sections.

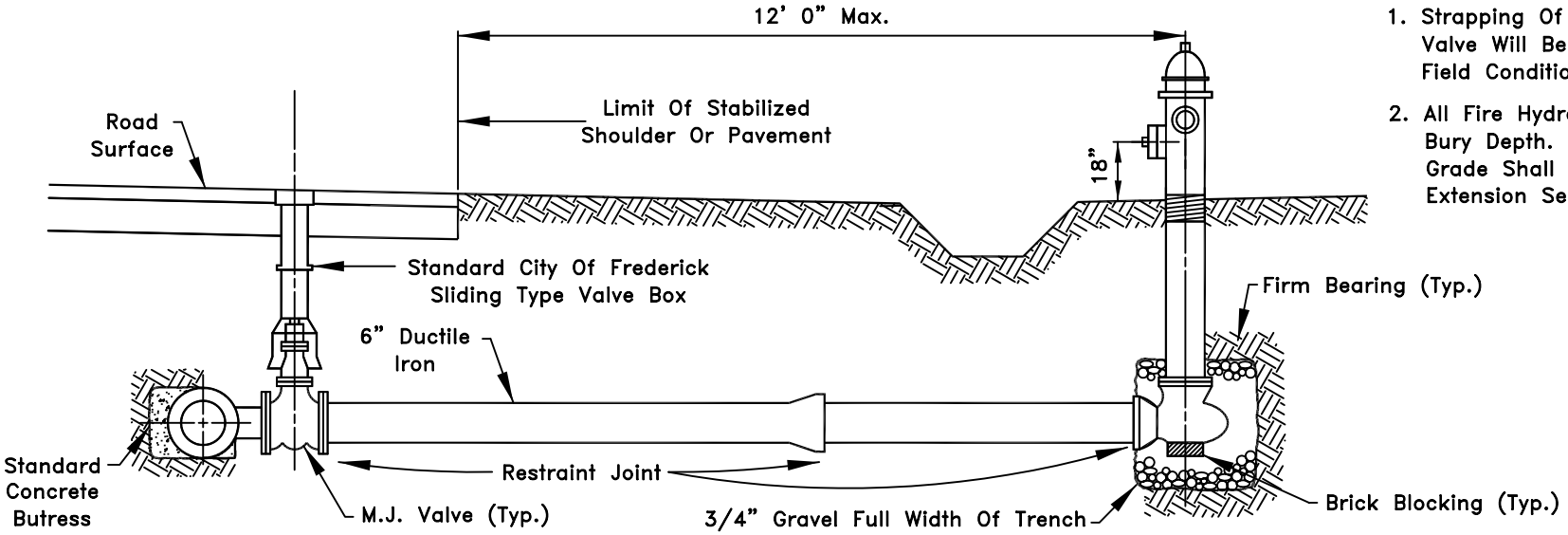

W–2a	DRAWN BY: KAT SCALE: NONE	REVISIONS:		ALTERNATE FIRE HYDRANT SETTING DETAIL	CITY OF FREDERICK Stan Aldridge 7-16-99 APPROVED DATE

CAD

NOTES:

1. Mechanical Joint Valve And Hydrant Tees And Connecting Pieces Shall Be Used For Anchoring Mechanical Joint Valves And Hydrants To The Pipe Main. These Hydrant Fittings With Integrally Attached Glands Shall Effectively Restrain Joint From Separation.

2. Joint Connections Shall Be Made With Standard Mechanical Joint Bolts And Gaskets. Tie Rods Are Not Required.

3. Glands Shall Rotate On Tee Branches And One End Of Connection Pieces To Facilitate Vertical Setting Of Valves And Hydrant In Sloping Terrain.

4. Hydrant Tees And Connecting Pieces May Be Gray Iron Or Ductile Iron And Shall Meet ANSI A21.10 And A21.11.

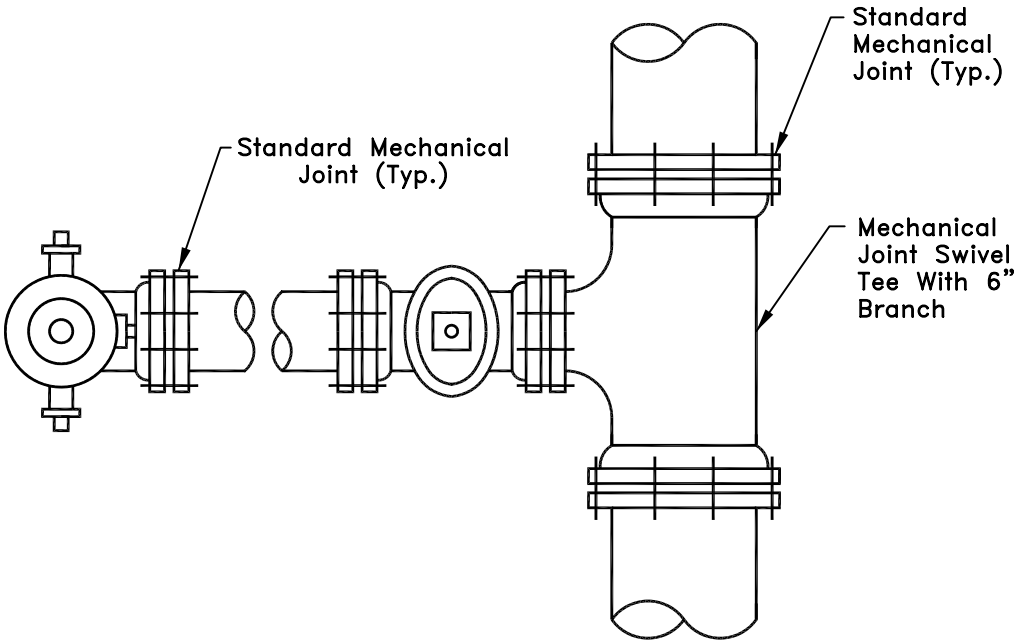

W-2b	DRAWN BY: KAT SCALE: NONE	REVISIONS:		ALTERNATE FIRE HYDRANT SETTING DETAIL	CITY OF FREDERICK Stan Aldridge APPROVED 7-16-99 DATE

CAD

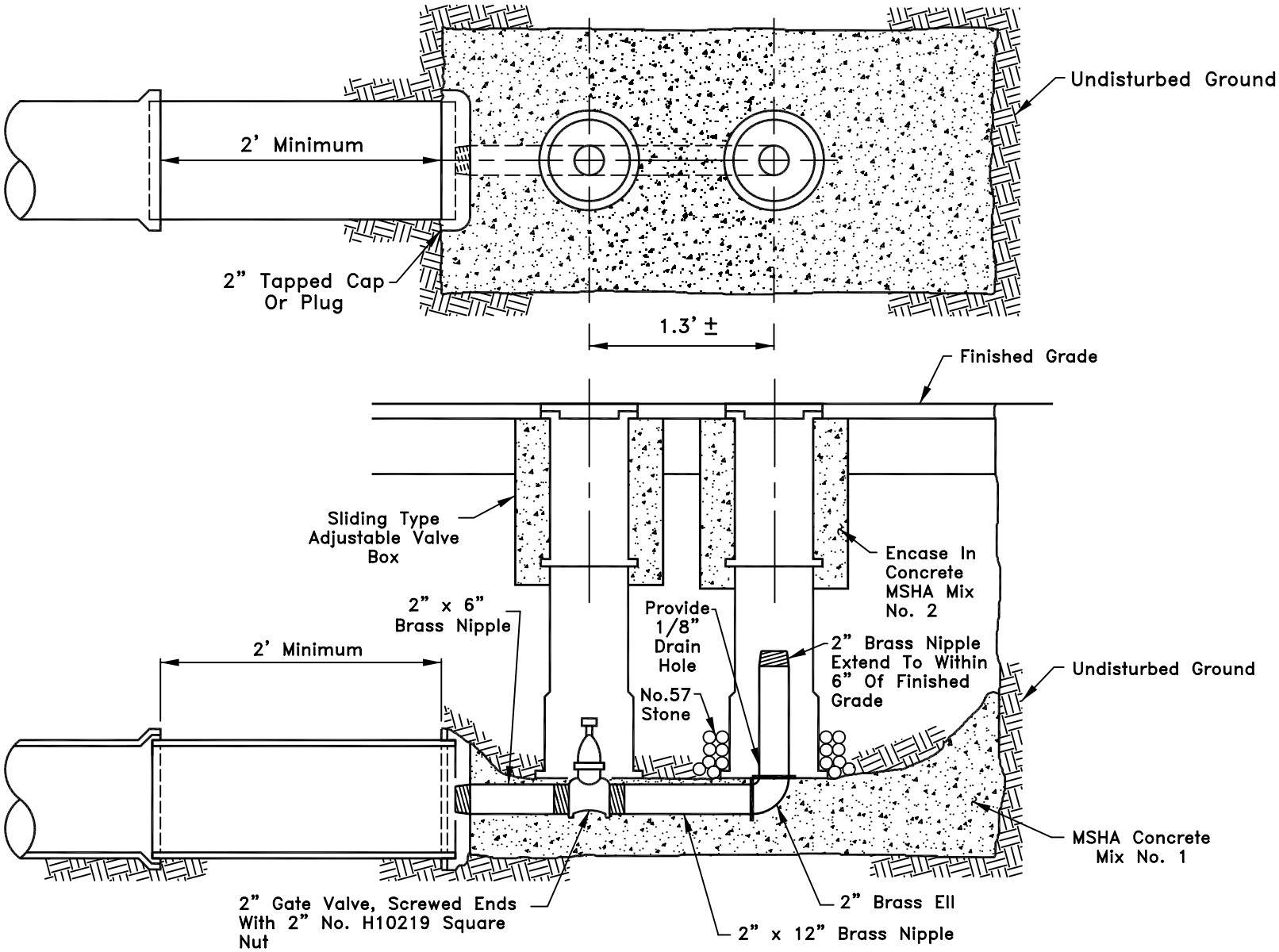

W–3	DRAWN BY: KAT SCALE: NONE	REVISIONS:		CAP AND BLOWOFF	CITY OF FREDERICK Stan Aldridge 7-16-99 APPROVED DATE

CAD

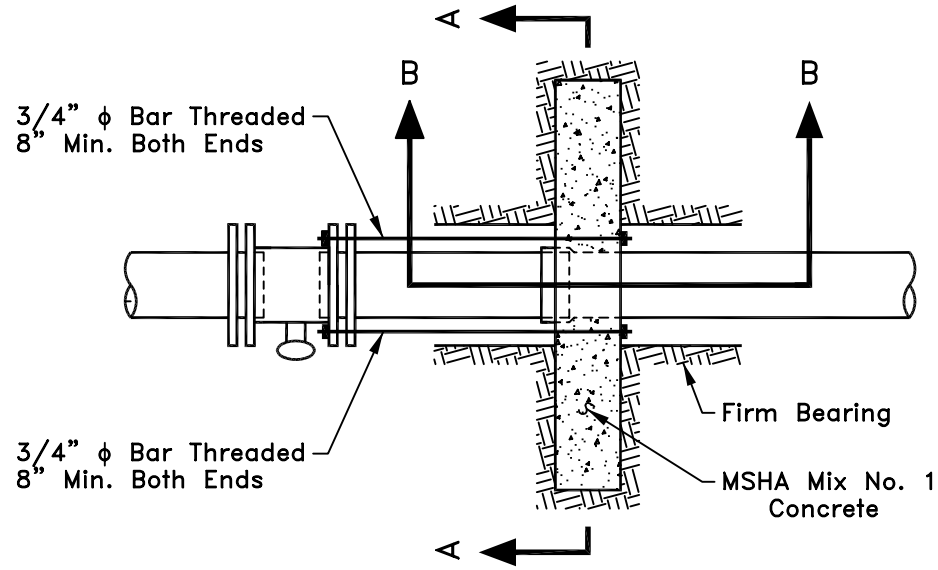

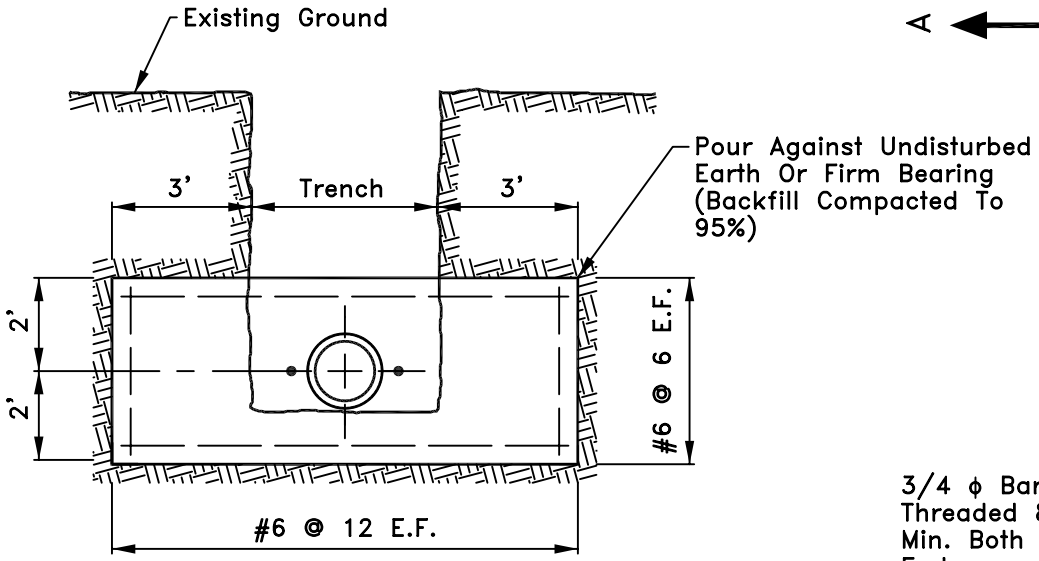

SECTION A–A

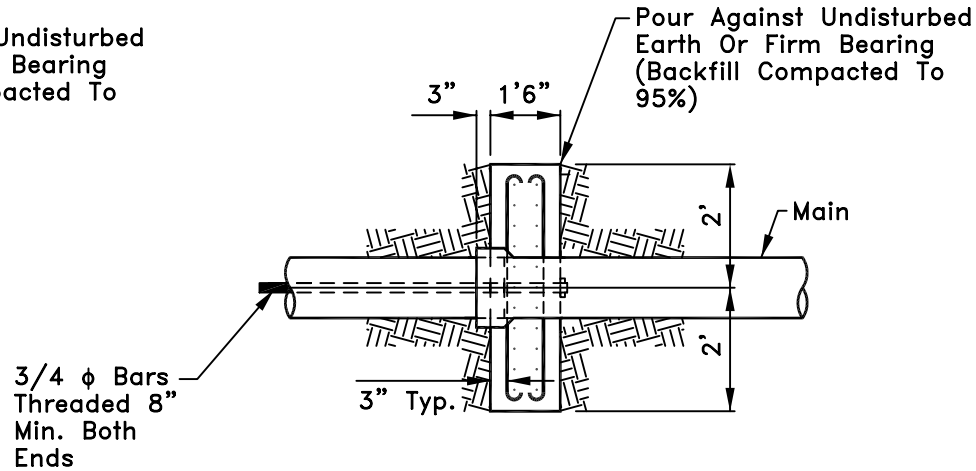

SECTION A–A

W–4	DRAWN BY: KAT SCALE: NONE	REVISIONS:		ANCHOR BLOCK	CITY OF FREDERICK Stan Aldridge 7-16-99 APPROVED DATE

CAD

NOTES:

1. Method Of Adjusting W.S.S.C. Or W.G.L. Valves In Advance Of Paving.

2. MSHA Mix. No. 6 Concrete. Firm Compacted Sub-Grade Clean And Neatly Cut Edges Required Prior To Placing Concrete.

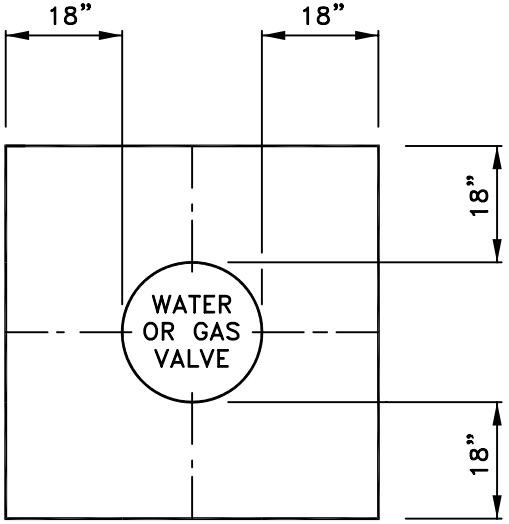

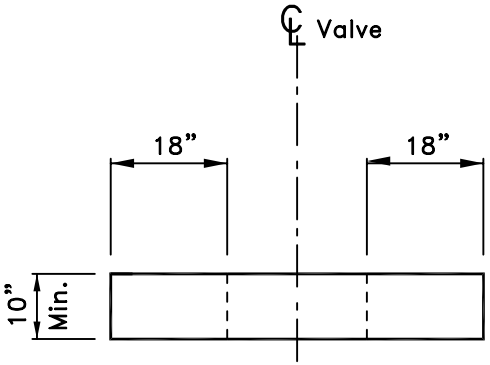

W-5	DRAWN BY: KAT SCALE: NONE	REVISIONS:		ADJUSTMENT OF WATER AND/OR GAS VALVES DETAIL	CITY OF FREDERICK Stan Aldridge 7-16-99 APPROVED DATE

CAD

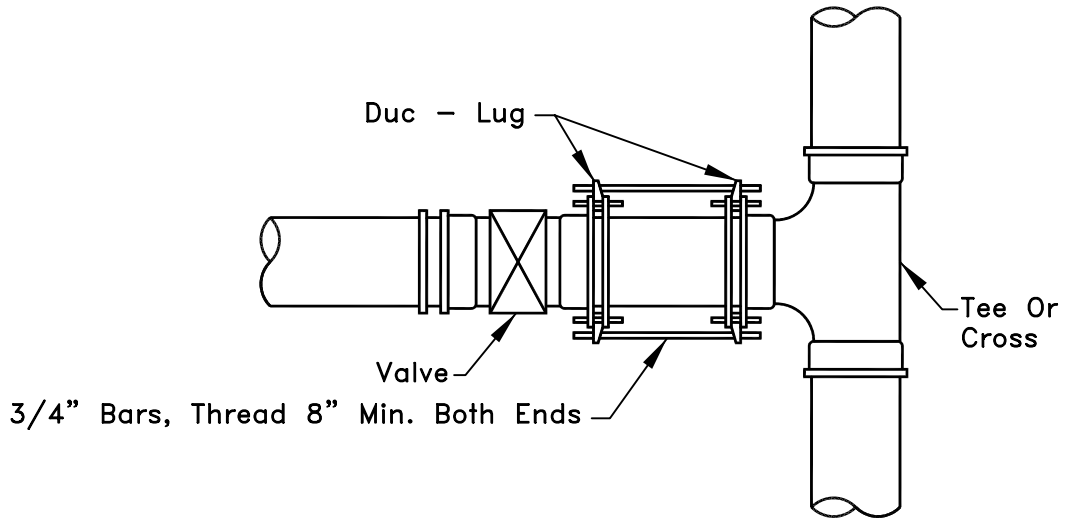

PLAN

Valve Size	No. Of 3/4" Dia. Bars Required	Max. Spigot Length
3"	2	27"
4"	2	27"
6"	2	27"
8"	2	27"
10"	4	27"
12"	6	27"
16"	8	36"
20"	12	36"
24"	16	36"
30"	20	36"

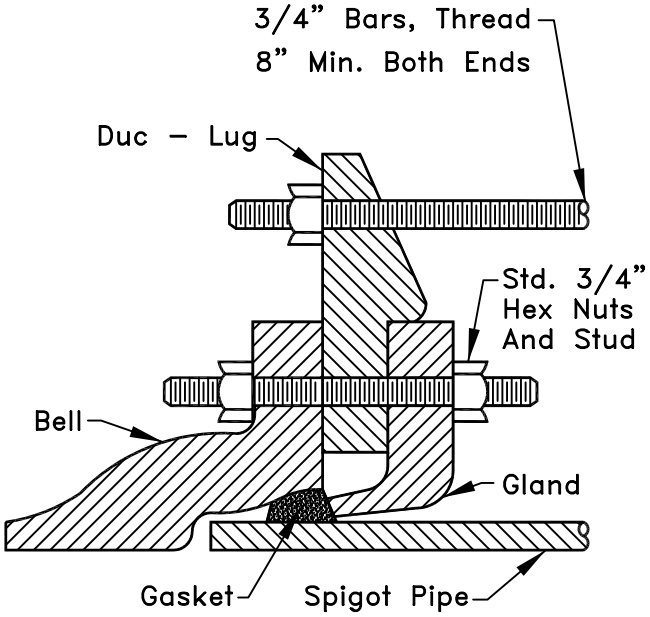

CROSS SECTION OF LUG ASSEMBLY

NOTES:

1. Mechanical Joint Fittings Only Shall Be Used.
2. All Steel Shall Be Coated With Two Coats Of Bituminous Paint, Conforming To MIL–P–23236P, Class 2.
3. If Tapping Sleeve And Valve Are Used, Omit Strapping And Spigot Pipe.
4. Tie Bolts By "Star" Are An Approved Equal To "Duc – Lugs".

CITY OF FREDERICK

APPROVED Stan Aldridge 7-16-99 DATE

METHOD OF ANCHORING VALVE TO TEE WITH "DUC – LUGS"

REVISIONS:

DRAWN BY: KAT

SCALE: NONE

W–6

CAD

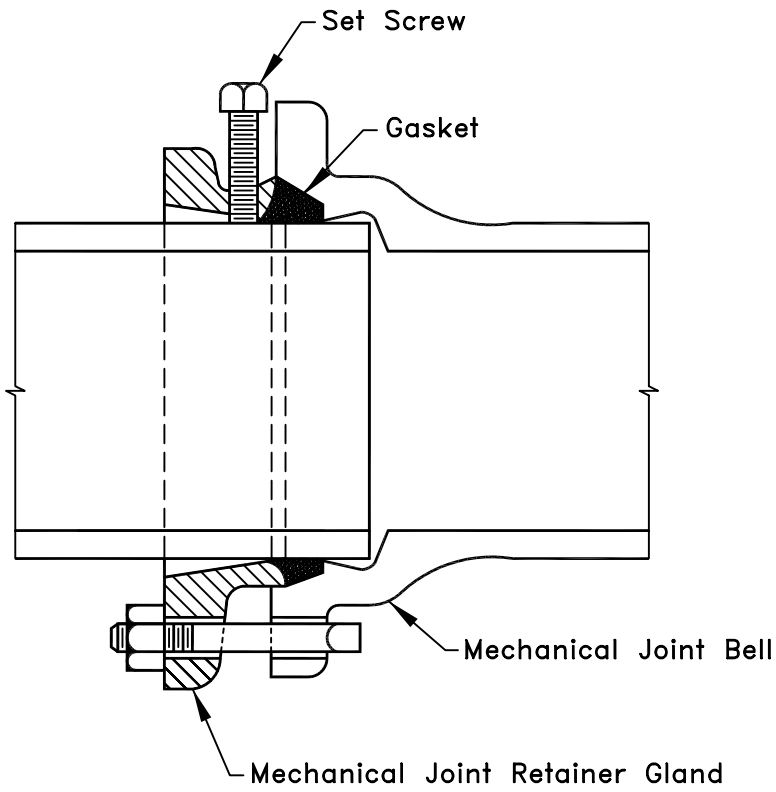

Nominal Size In Inches	Number Of Set Screws	Pressure Rating In PSI
3	4	300
4	4	300
6	6	300
8	9	200
10	16	200
12	16	200
16	24	200
20	28	200
24	32	150
30	40	150

NOTES:

1. All Set Screws Are 5/8" With Hardened Cupped Ends And 5/8" Square Heads.

2. Sizes 16" Through 30" Are For Installation On Ductile Iron Pipe Only.

3. Tighten Set Screws Evenly To 80 Ft.–Pounds On 3"– 12" Glands And 65 Ft.–Pounds On 16"– 30" Glands.

CITY OF FREDERICK

APPROVED Stan Aldridge 7-16-99 DATE

ALTERNATE METHOD OF ANCHORING VALVE TO TEE WITH MECHANICAL JOINT RETAINER GLAND

REVISIONS:

DRAWN BY: KAT

SCALE: NONE

W-6a

CAD

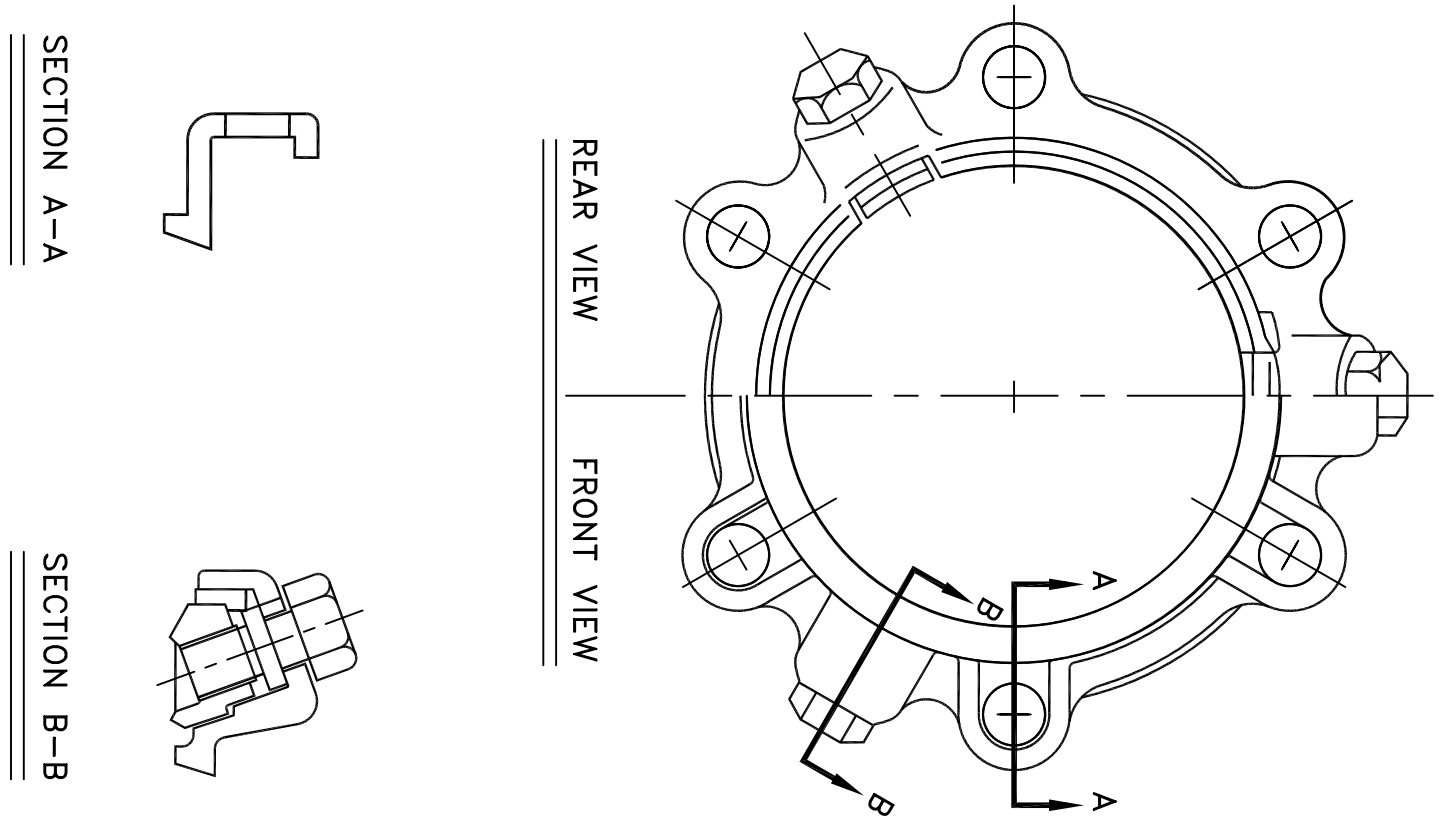

FRONT VIEW

REAR VIEW

SECTION A–A

SECTION B–B

W–6b	DRAWN BY: KAT SCALE: NONE	REVISIONS:		"MEGALUG" ALTERNATE METHOD OF ANCHORING VALVE TO TEE	CITY OF FREDERICK Stan Aldridge APPROVED 7-16-99 DATE

CAD

TABLE OF VALUES

Main Diameter	4"	6"	8"	10"	12"	14"	16"	18"	20"
A (Minimum)	4' 10"	5' 3"	5' 6"	5' 9"	6' 0"	6' 2"	6' 8"	7' 3"	7' 6"

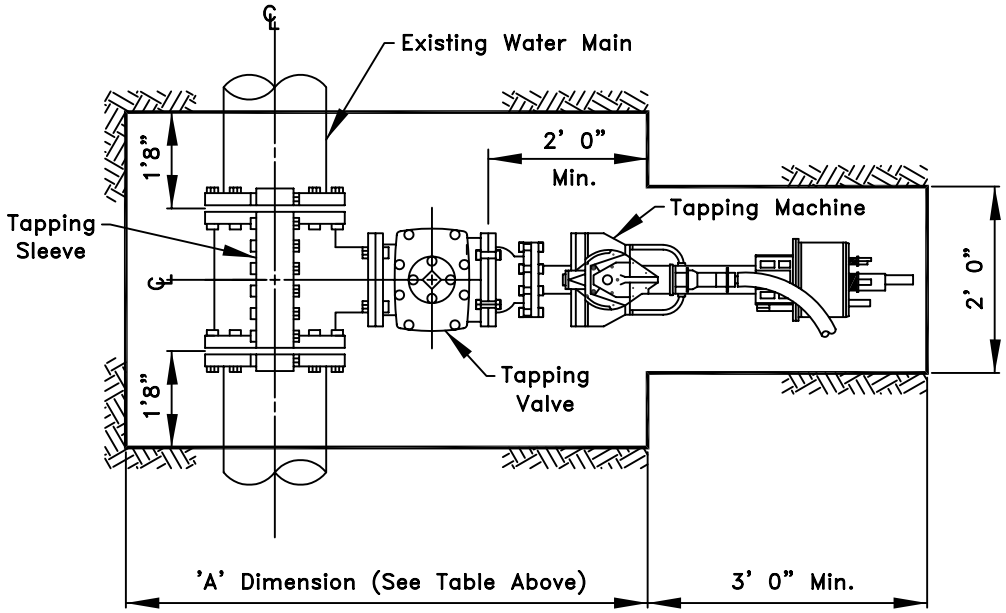

PLAN

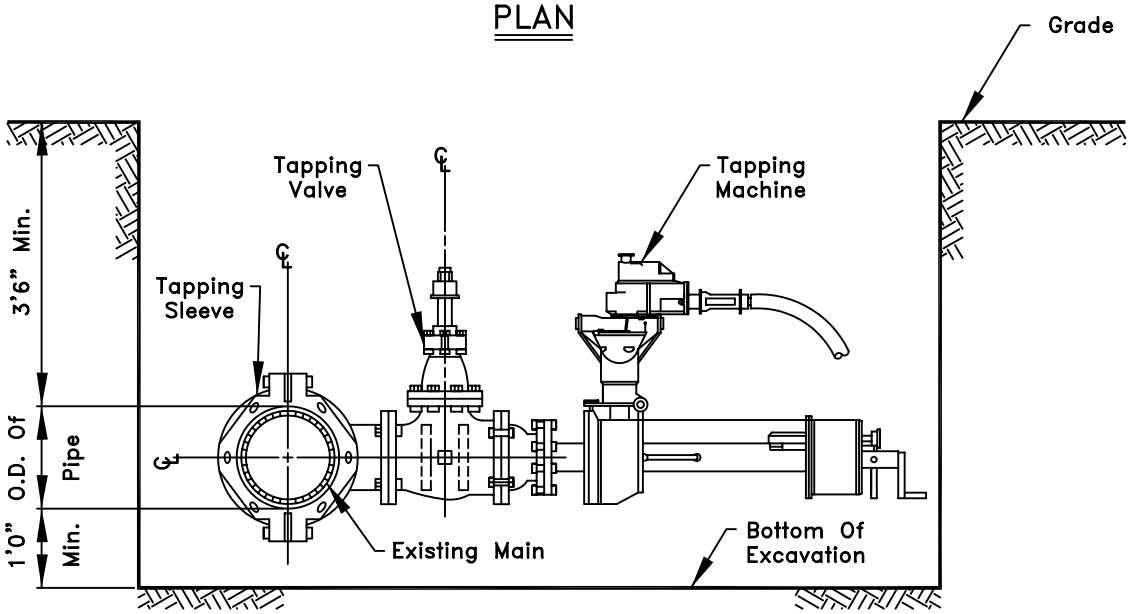

ELEVATION

CITY OF FREDERICK

APPROVED

DATE 7-16-99

TAPPING SLEEVE AND VALVE EXCAVATION

REVISIONS:

DRAWN BY: KAT

SCALE: NONE

W-7

CAD

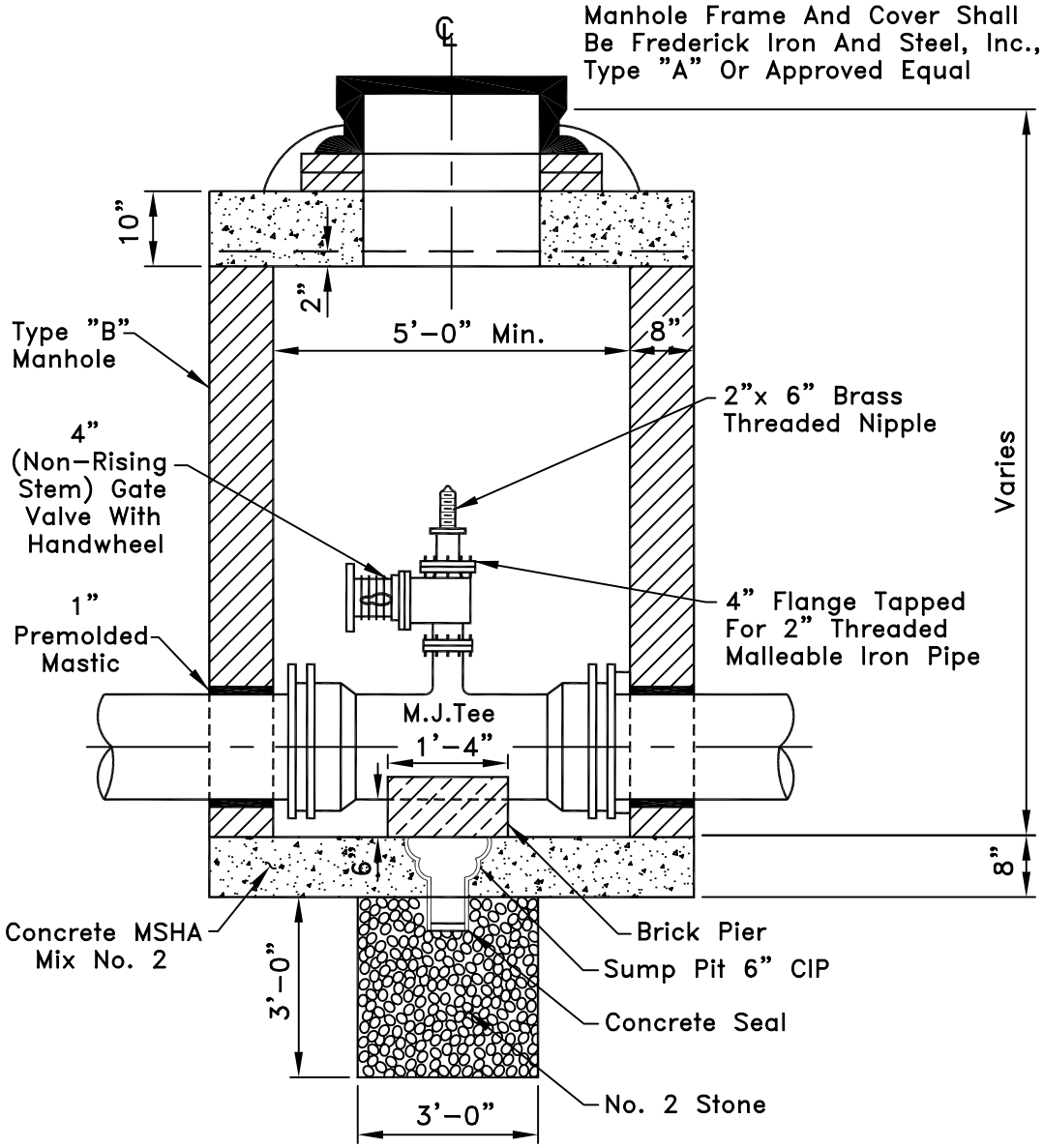

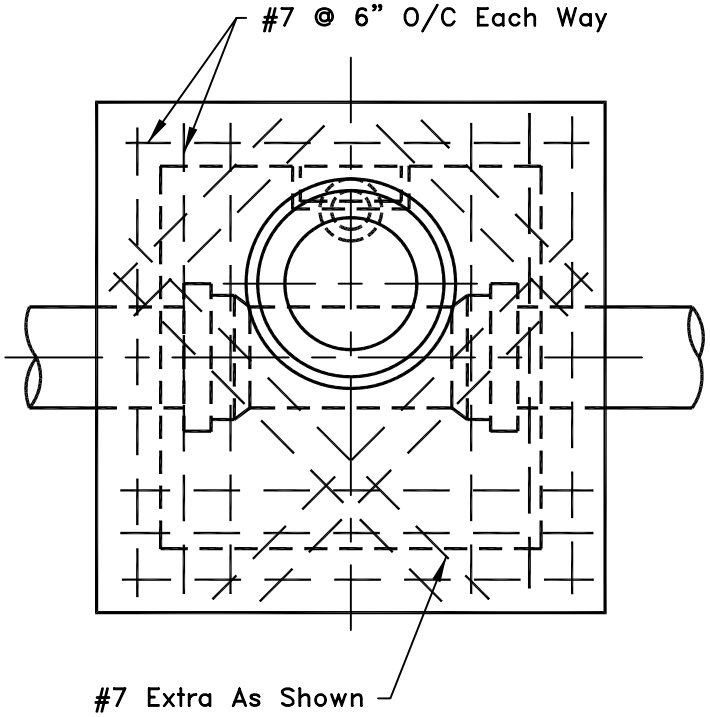

W-8	DRAWN BY: KAT SCALE: NONE	REVISIONS:		DEWATERING DEVICE WATER	CITY OF FREDERICK Stan Aldridge 7-16-99 APPROVED DATE

CAD

(A) Boiler Drain And Vacuum Breaker
(B) Approved Valves
(C) Meter (1–1/2" Up, Flanged)
(D) Pressure Reducer Valve
(E) O, S & Y Valve, Rising Stem
(F) Double Detector Check
(G) Rod (3/4" Tarred)
(H) Water Meter Height
(I) Concrete Buttress
(J) Leg Support Stand Min. 1–1/4" IPS
(K) Fire Line Shall Be Flanged Fittings
(L) Double Phone Jack

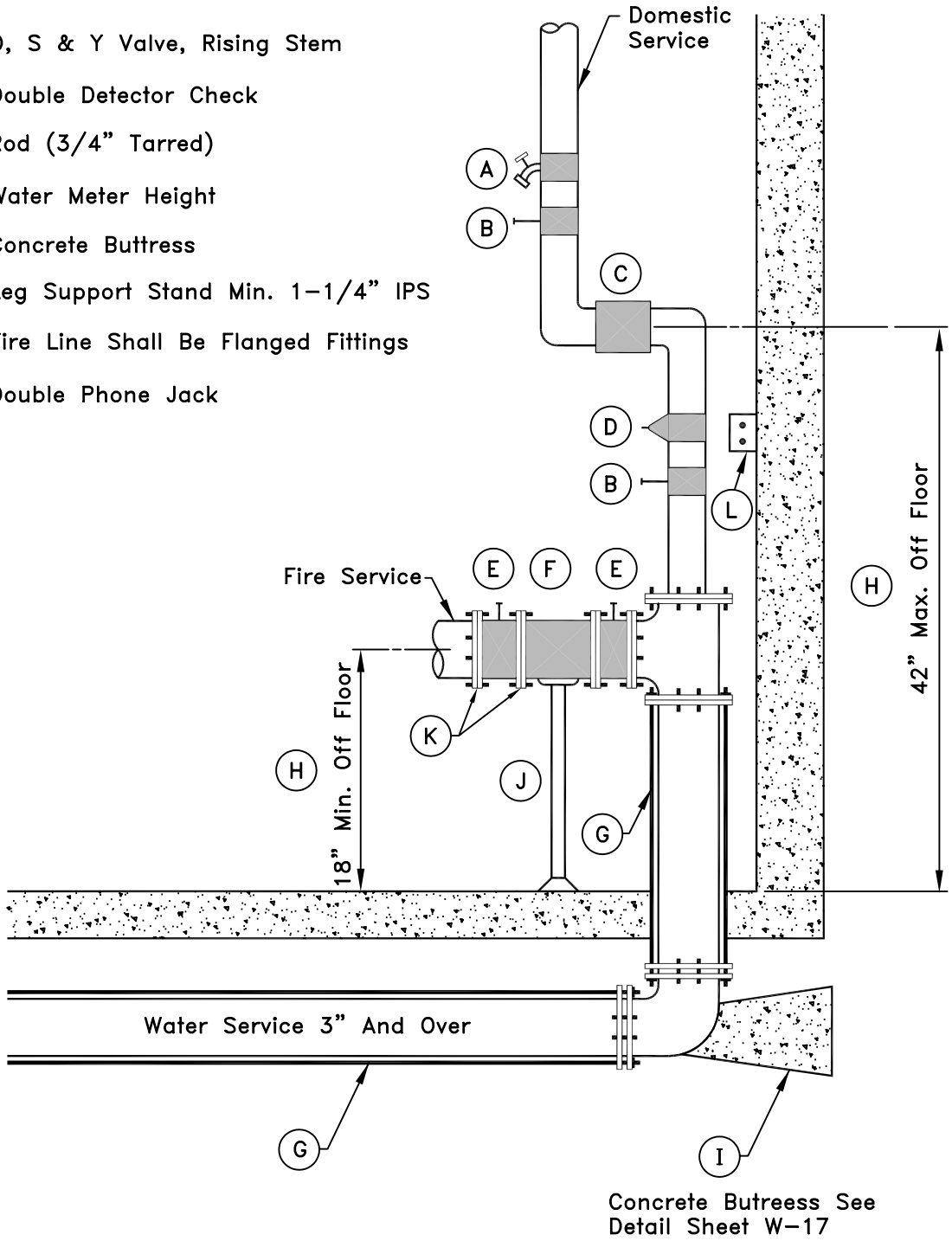

NOTES:

1. For General Notes And Clearances See Detail Sheet W–9b.

CITY OF FREDERICK
APPROVED
7–16–99
DATE

METER SETTINGS
SERVICE THROUGH FLOOR

REVISIONS:

DRAWN BY: KAT
SCALE: NONE

W–9

CAD

(A) Boiler Drain And Vacuum Breaker
(B) Approved Valves
(C) Meter (1-1/2" Up, Flanged)
(D) Pressure Reducer Valve
(E) O, S & Y Valve, Rising Stem
(F) Double Detector Check
(G) Rod (3/4" Tarred)
(H) Water Meter Height
(I) Concrete Buttress
(J) Leg Support Stand Min. 1-1/4" IPS
(K) Fire Line Shall Be Flanged Fittings
(L) Double Phone Jack

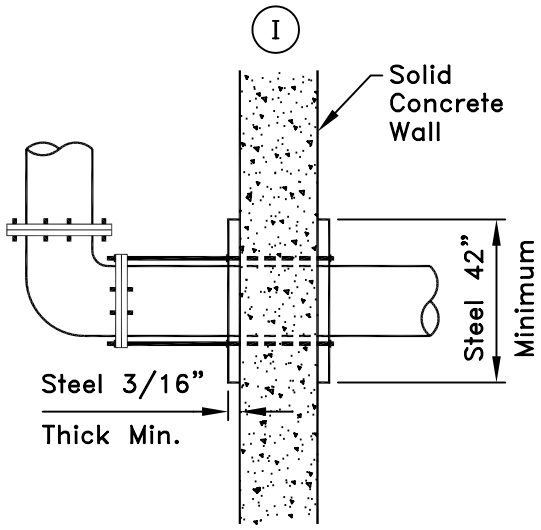

DETAIL 'A'

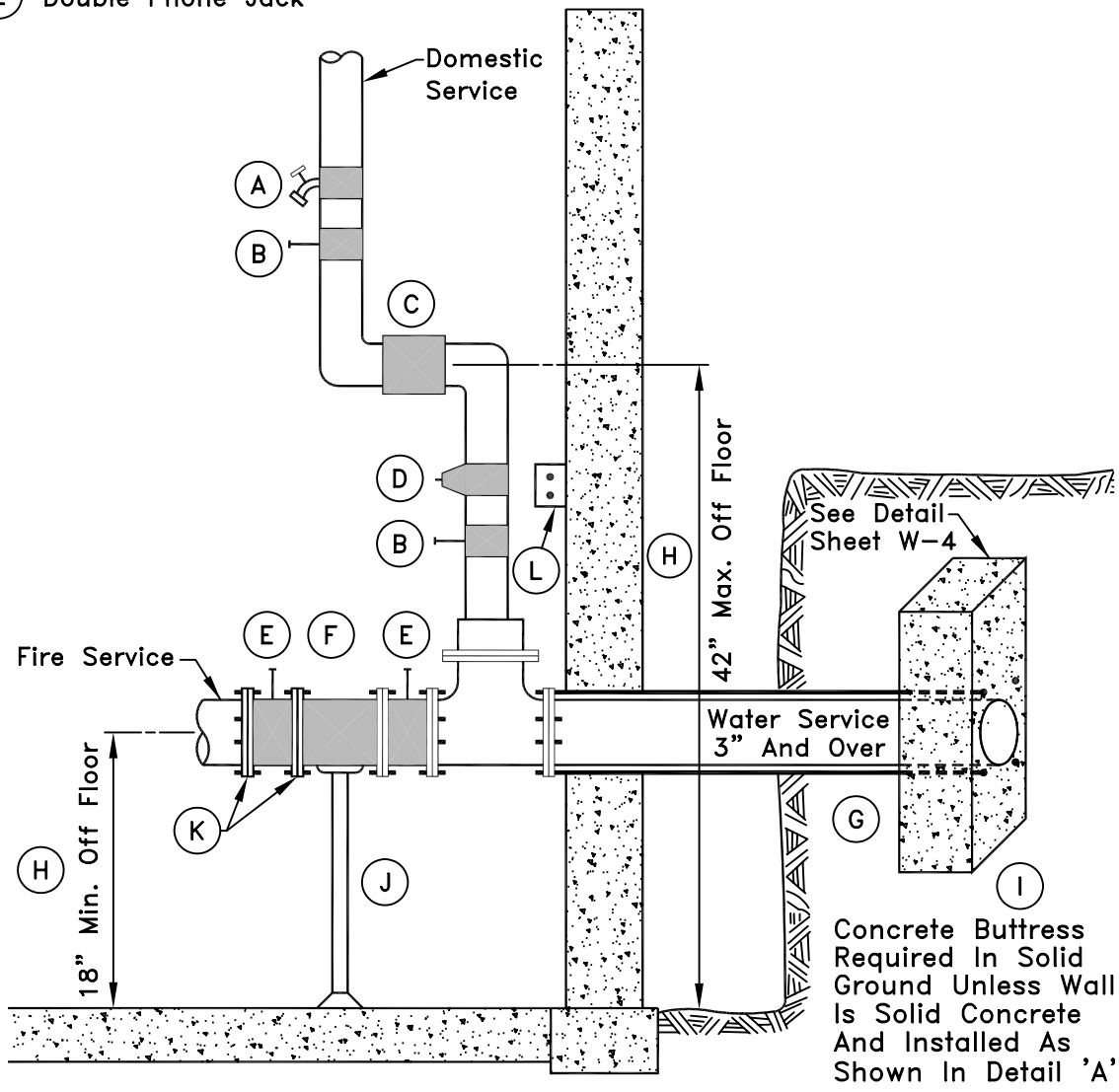

NOTES:

1. For General Notes And Clearances See Detail Sheet W-9b.

CITY OF FREDERICK
APPROVED
7-16-99
DATE

METER SETTINGS
SERVICE THROUGH WALL

REVISIONS:

DRAWN BY: KAT
SCALE: NONE

W-9a

CAD

NOTES:

1. Water Services Smaller Than 3" Shall Be Installed Without A detector Check. Use Dwelling Detail For 3/4" – 2" Services.

2. All Materials And Installation Shall Be Approved As Per Current Plumbing Code.

3. Detector Check Clearances:

   a.) 72" Minimum Clearance From Floor To Ceiling.

   b.) 30" Minimum Clearance From Wall In Front Of Detector Check To Nearest Outside Edge Of Detector Check.

   c.) 18" Minimum Clearance From Eall Behind Detector Check To Nearest Outside Edge Of Detector Check.

   d.) 18" Minimum Clearance From Wall Behind Detector Check To Nearest Outside Edge Of Detector.

CITY OF FREDERICK

Stan Aldridge 7-16-99

APPROVED DATE

METER SETTINGS
SERVICE THROUGH FLOOR AND
SERVICE THROUGH WALL
GENERAL NOTES

REVISIONS:

DRAWN BY: KAT
SCALE: NONE

W-9b

CAD

NOTES:

1. Water Meter To Be Installed Inside Dwelling.
2. For Tap Sizes And Pipe Class See Detail Sheet W-10c.
3. △1 Water House Connection Tap Size Is 1" Min. For Single Family Dwellings Or For Townhouses And/ Or As Determined By A Fire Protection Engineer. Calculations To Be Approved By The City.
4. Where Traffic Is Expected, Install Roadway Valve Box. Contact Department Of Public Works, Water And Sewer Department, For Appropriate Roadway Valve Box To Be Installed

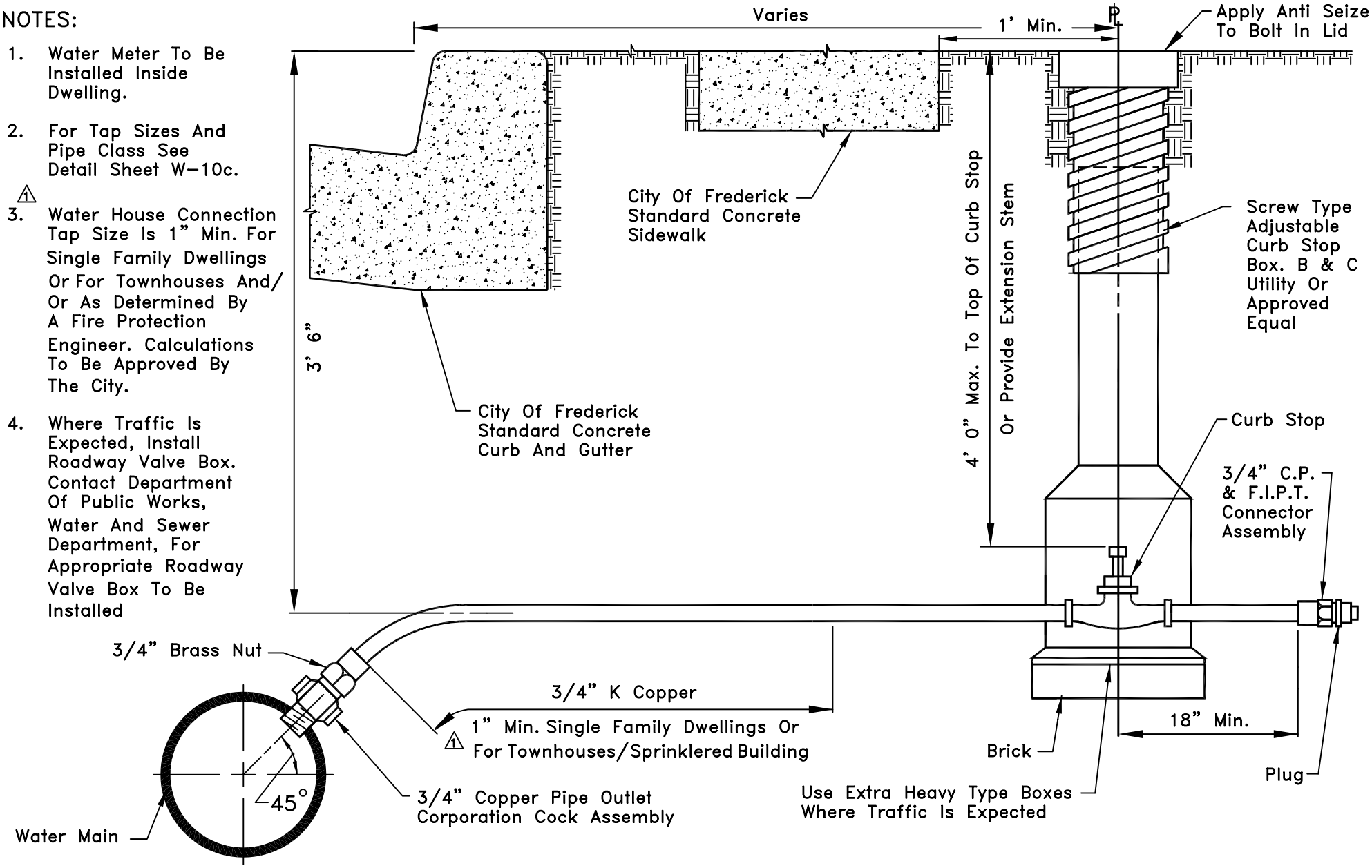

W-10	DRAWN BY: KAT SCALE: NONE	REVISIONS: △1 RCP 9/12/06	WATER HOUSE CONNECTION FOR INSIDE DWELLING METER	CITY OF FREDERICK Stan Aldridge APPROVED 7-16-99 DATE

CAD

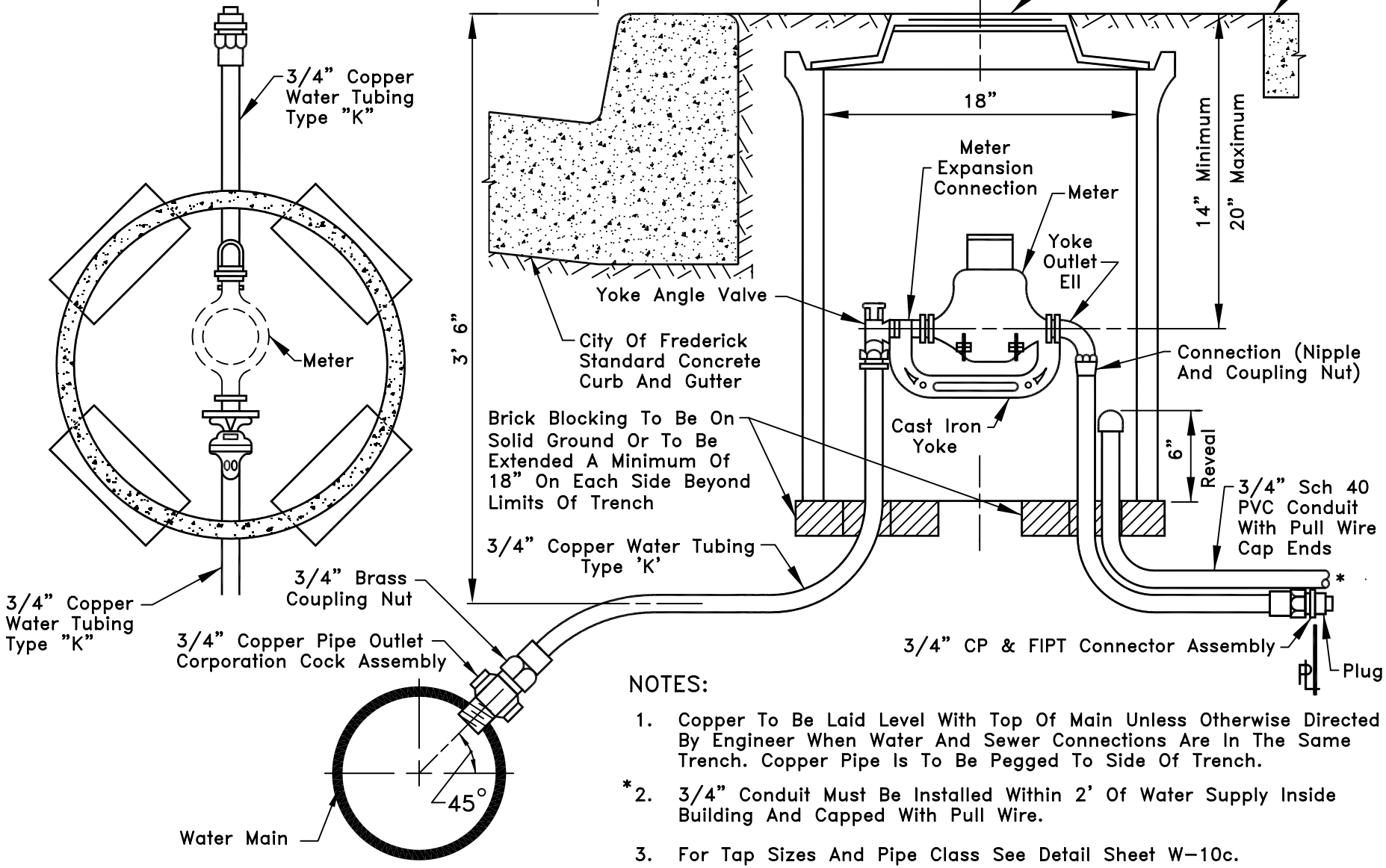

NOTES:

1. Copper To Be Laid Level With Top Of Main Unless Otherwise Directed By Engineer When Water And Sewer Connections Are In The Same Trench. Copper Pipe Is To Be Pegged To Side Of Trench.

*2. 3/4" Conduit Must Be Installed Within 2' Of Water Supply Inside Building And Capped With Pull Wire.

3. For Tap Sizes And Pipe Class See Detail Sheet W-10c.

W-10a	DRAWN BY: KAT SCALE: NONE	REVISIONS:	STANDARD INSTALLATION 3/4" METERED DOMESTIC SERVICE	CITY OF FREDERICK Stan Aldridge APPROVED 7-16-99 DATE

CAD

NOTES:

1. 1" Water Meter To Be Installed Inside Dwelling.
2. For Tap Sizes And Pipe Class See Detail Sheet W-10b.
3. Water House Connection Tap Size Is 1" Min. For Townhouses And/ Or As Determined By A Fire Protection Engineer. Flow Calculated After Pressure Reducing Valve In House. (Calculations To Be Approved By The City Engineer).
4. Where Traffic Is Expected, Install Roadway Valve Box.
5. See W-10b Cont. For Plan View.

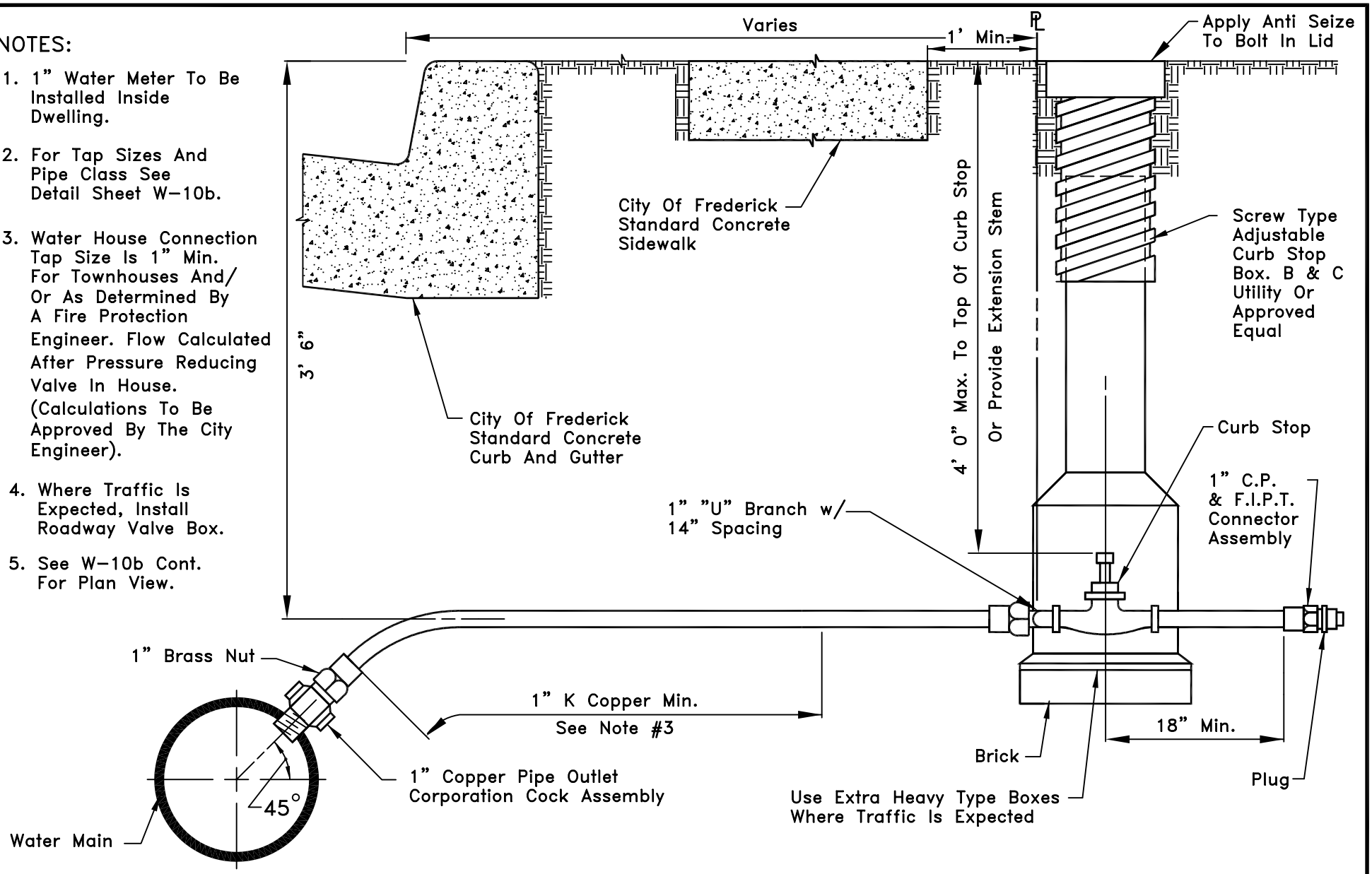

W-10b	DRAWN BY: KAT SCALE: NONE	REVISIONS:	DOUBLE WATER HOUSE CONNECTION FOR INSIDE DWELLING METER	CITY OF FREDERICK Stan Aldridge APPROVED 7-16-99 DATE

CAD

GENERAL NOTES:

1. For Section Vew See Detail Sheet W-10b.

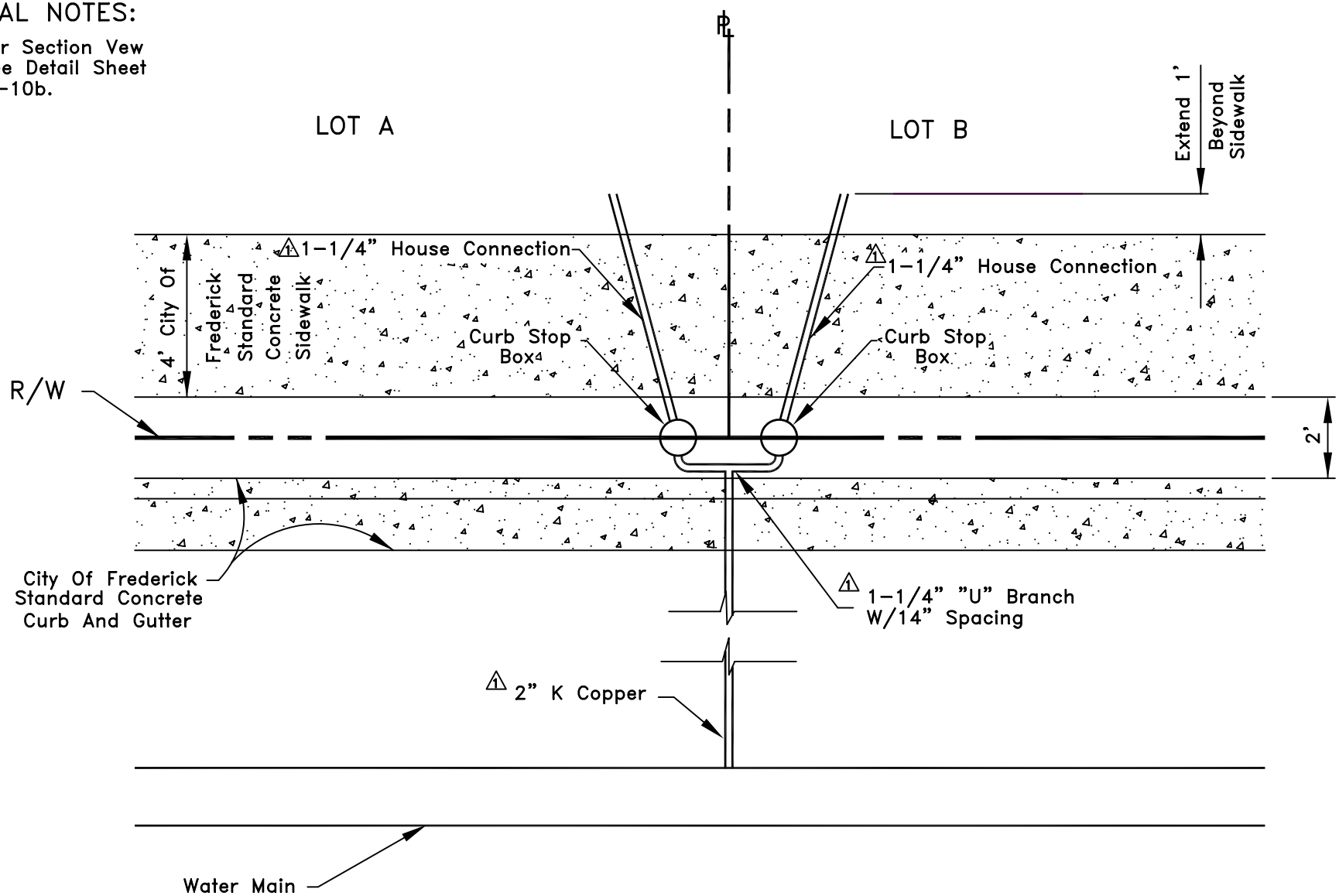

W-10b Continued	DRAWN BY: KAT SCALE: NONE	REVISIONS: 1 WH 2/7/00		DOUBLE WATER HOUSE CONNECTION PLAN VIEW	CITY OF FREDERICK Stan Aldridge APPROVED 7-16-99 DATE

CAD

NOTES:

1. The Contractor Has The Option To Use The Class Of Pipe Listed Or Double Band Brass Saddles Or Approved Equal.

2. In Cases Where Thickness Class Can Not Be Met, Double Band Brass Saddles, Or Approved Equal, And Corporation Stops Shall Be Used.

3. Teflon Tape Shall Be Used With All Corporation Stops.

DIP Thickness Class That Will Provide The Required Three Full Threads Of Engagement With The Corporation Stop Inlet Thread.

THICKNESS CLASSES					
Pipe Size	Tap Size				
	3/4"	1"	1-1/4"	1-1/2"	2"
4"	53	55	–	–	–
6"	51	53	55	–	–
8"	50	52	53	55	–
10"	50	51	52	53	55
12"	50	50	51	52	54
14"	50	50	50	51	52
16"	50	50	50	50	51

CITY OF FREDERICK

Stan Aldridge 7-16-99

APPROVED DATE

TAP SIZES AND PIPE CLASS FOR WATER HOUSE CONNECTIONS

REVISIONS:

DRAWN BY: KAT

SCALE: NONE

W-10c

CAD

OPEN

W-11	DRAWN BY: SCALE: NONE	REVISIONS:			CITY OF FREDERICK APPROVED DATE

CAD

OPEN

W-12	DRAWN BY: SCALE: NONE	REVISIONS:			CITY OF FREDERICK APPROVED DATE

CAD

NOTES:

1. Walls Shall Be Brick, Plain MSHA Mix No. 2 Concrete Or Reinforced Concrete.
2. ‡ Wall May Be 8" Reinforced Concrete.
3. * Increase To 12" For Depth Over 7'.
4. For Section A–A See Detail Sheet W–13a.
5. For Table Of Values See Detail Sheet W–13c.
6. For Additionl Notes See Detail Sheet W–13d.

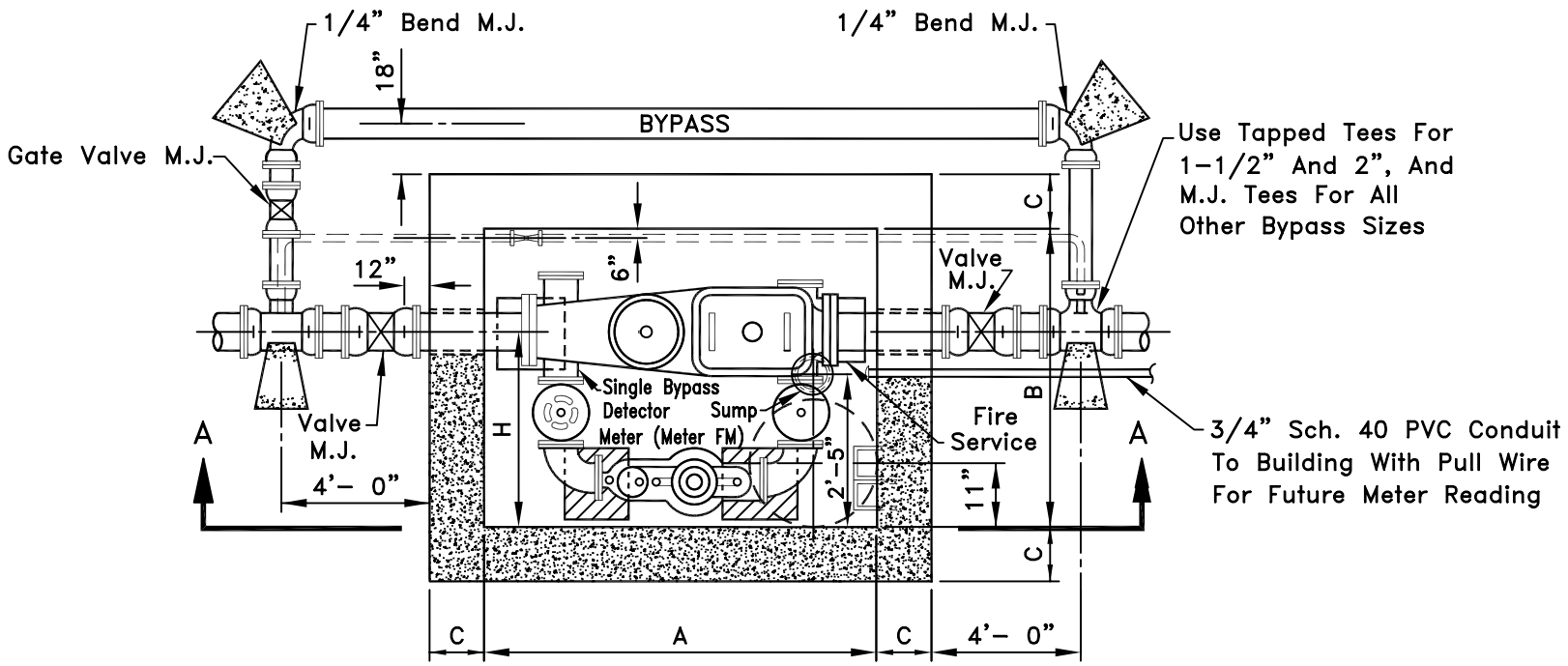

W–13	DRAWN BY: KAT SCALE: NONE	REVISIONS:		STANDARD INSTALLATION 2",3",4",6",8" & 10" WATER SUPPLY SERVICE 2",3",4",6",8" & 10" COMBINED SERVICE PLAN	CITY OF FREDERICK Stan Aldridge 7–16–99 APPROVED DATE

CAD

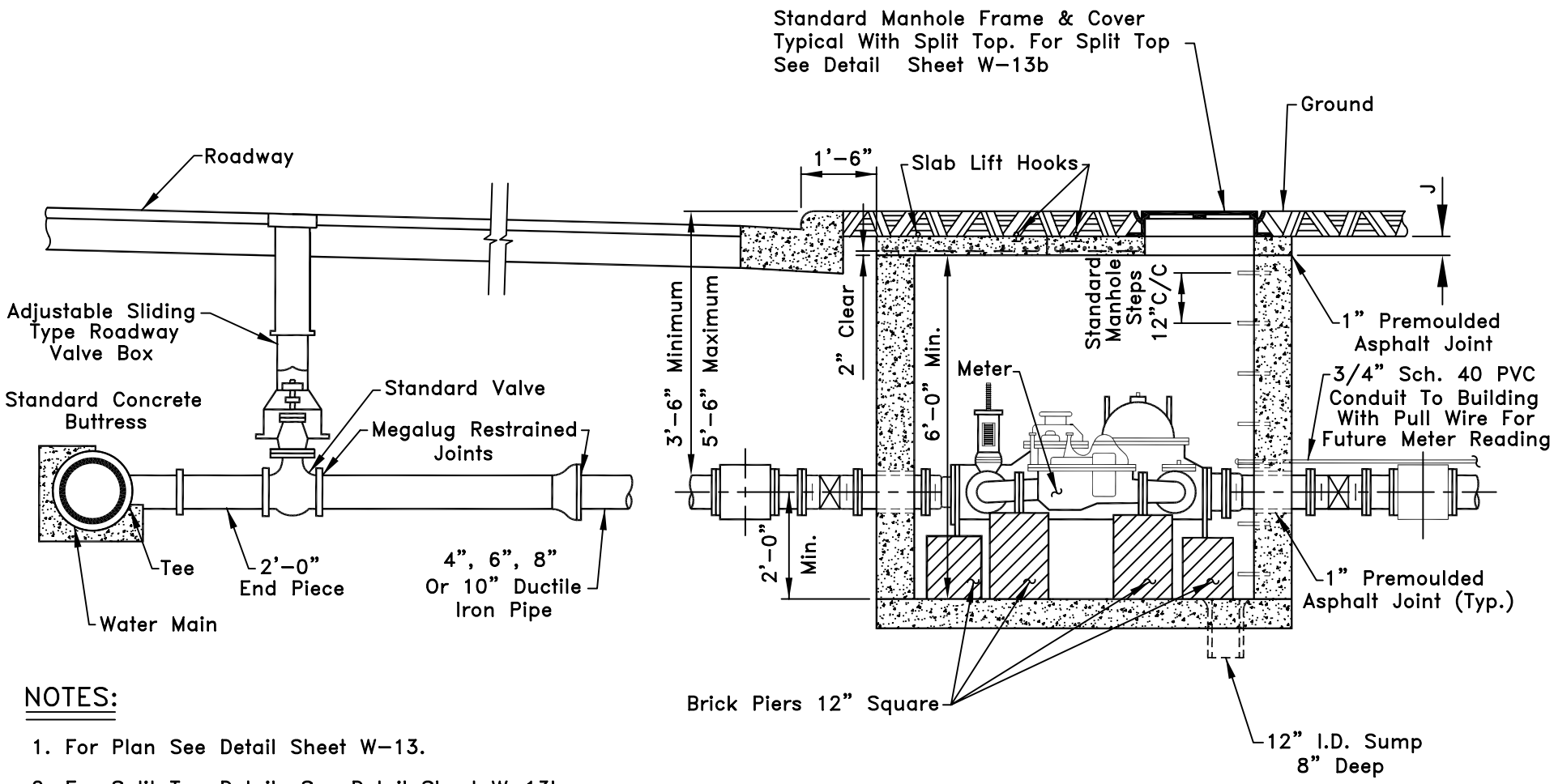

NOTES:

1. For Plan See Detail Sheet W-13.
2. For Split Top Details See Detail Sheet W-13b.
3. For Table Of Values See Detail Sheet W-13c.
4. For Additional Notes See Detail Sheet W-13d.

W-13a	DRAWN BY: KAT SCALE: NONE	REVISIONS:	STANDARD INSTALLATION 2",3",4",6",8" & 10" WATER SUPPLY SERVICE 2",3",4",6",8" & 10" COMBINED SERVICE SECTION A-A	CITY OF FREDERICK Stan Aldridge APPROVED	7-16-99 DATE

CAD

NOTES:

1. For Values See Table On Detail Sheet W–13c.

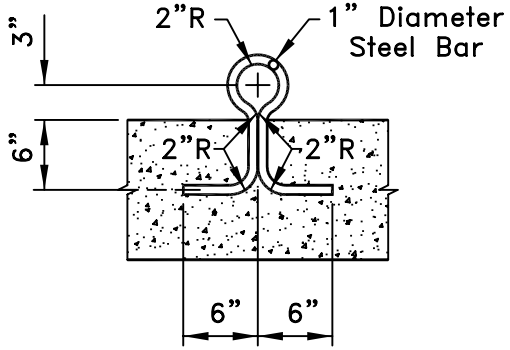

SLAB LIFT HOOK DETAIL

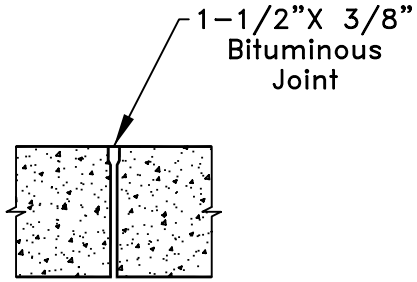

JOINT DETAIL

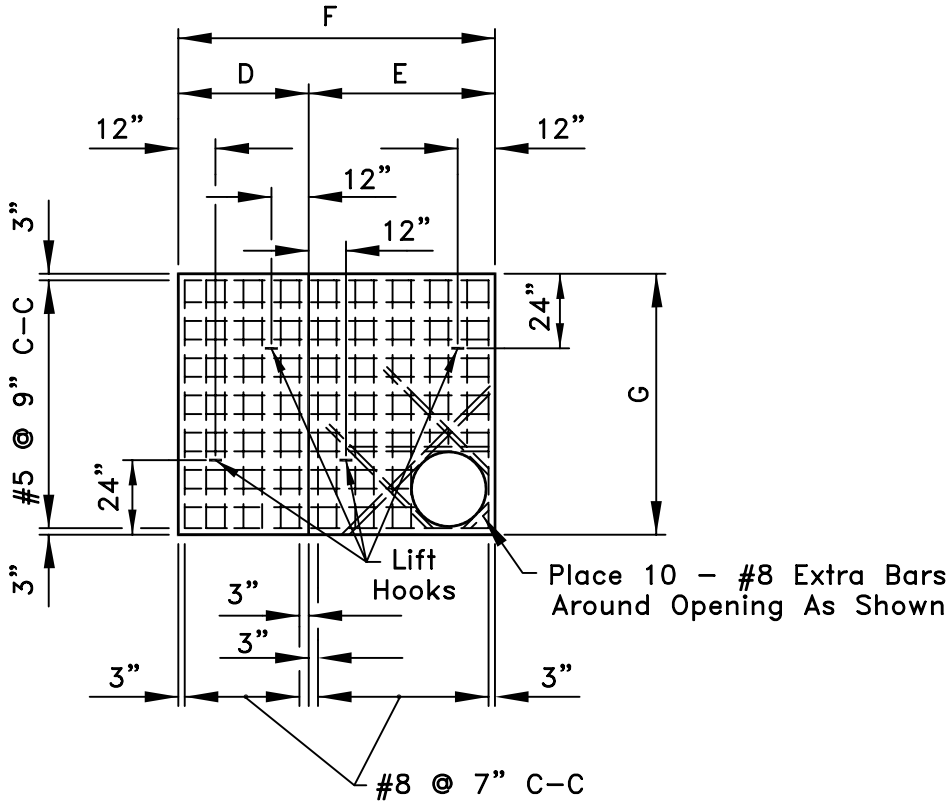

TOP SLAB DETAIL

W–13b	DRAWN BY: KAT SCALE: NONE	REVISIONS:		SPLIT TOP DETAILS WATER METER INSTALLATION 2", 3", 4", 6", 8" & 10" METERS	CITY OF FREDERICK Stan Aldridge 7–16–99 APPROVED DATE

CAD

METER SIZE	BYPASS SIZE	A	B	C	D	E	F	G	H	J
2"	1"	6'-5"	6'-4"	0'-8"	3'-10"	3'-11"	7'-9"	7'-8"	3'-10"	0'-9"
3"	1-1/2"	6'-5"	6'-4"	0'-8"	3'-10"	3'-11"	7'-9"	7'-8"	3'-10"	0'-9"
4"	2"	6'-5"	6'-6"	0'-8"	3"-10"	3'-11"	7'-9"	7'-10"	3'-11"	0'-9"
6"	3"	7'-5"	6'-11"	0'-8"	4'-4"	4'-5"	8'-9"	8'-3"	4'-3"	0'-10"
8"	4"	8'-1"	7'-7"	1'-0"	5'-0"	5'-1"	10'-1"	9'-7"	4'-9"	0'-11"
10"	6"	9'-4"	8'-8"	1'-0"	5'-8"	5'-8"	11'-4"	10'-8"	5'-6"	0'-11"
10"x12"	6"	9'-4"	8'-8"	1'-0"	5'-8"	5'-8"	11'-4"	10'-8"	5'-6"	0'-11"

W-13c

DRAWN BY: KAT
SCALE: NONE

REVISIONS:

TABLE OF VALUES
WATER METER INSTALLATION
2", 3", 4", 6", 8" & 10" METERS

CITY OF FREDERICK

Stan Aldridge
APPROVED

7-16-99
DATE

CAD

NOTES:

1. 1", 1-1/2" And 2" Bypass Lines To Copper Type "K".

2. All Ductile Iron Pipe To Be Class 51 Or Better.

3. All Vault Concrete To Be MSHA Mix No. 2.

4. Block 3", 4" And 6" Tees And Bends With MSHA Mix No. 1. See Frederick City Standard Details, Or Restraint Joints.

5. All Steel Reinforcing To Have Standard Hooks.

6. 1", 1-1/2" And 2" Bypass Lines To Be Placed Inside Vault, All Others Outside Vault.

7. Brick Piers To Be 8"x 4" Under 2" And 3" Meters, 8"x 8" Under 4" And 6" Meters And 12"x 12" Under 8" And 10" Meters.

8. Bottom Of Vault Shall Be Concrete.

9. 3/4" Conduit Must Be Installed Within 2' Of Water Supply Inside Building.

10. Place 1/2" Premolded Bituminous Joint Material Between Concrete And Meter Frame.

11. For Split Top Details See W-13b.

12. Valve Boxes To Be Placed On All Exterior Valves.

13. For The 2" Meter Use Copper Tubing, 2"x 1" Copper Tees, Copper To Iron Pipe Thread Adaptors, Brass Valves, Brass Pipe Nipples And Connect To Meter Flanges With A.S.A. Class 125 Companion Flanges Tapped 2" I.P.T.

CITY OF FREDERICK

Stan Aldridge 7-16-99

APPROVED DATE

WATER METER INSTALLATION
2", 3", 4", 6", 8" & 10" METERS
GENERAL NOTES

REVISIONS:

DRAWN BY: KAT
SCALE: NONE

W-13d

CAD

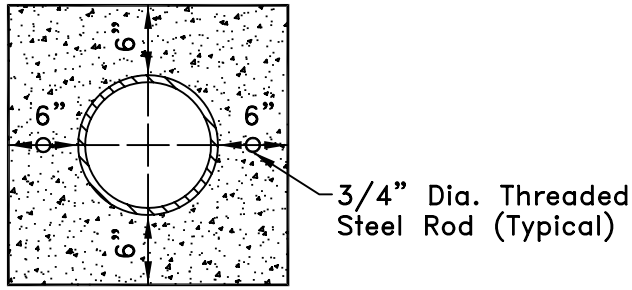

CONCRETE ANCHOR BLOCK

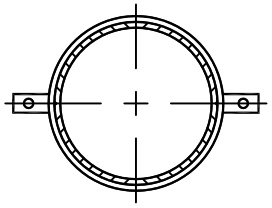

PIPE CLAMP

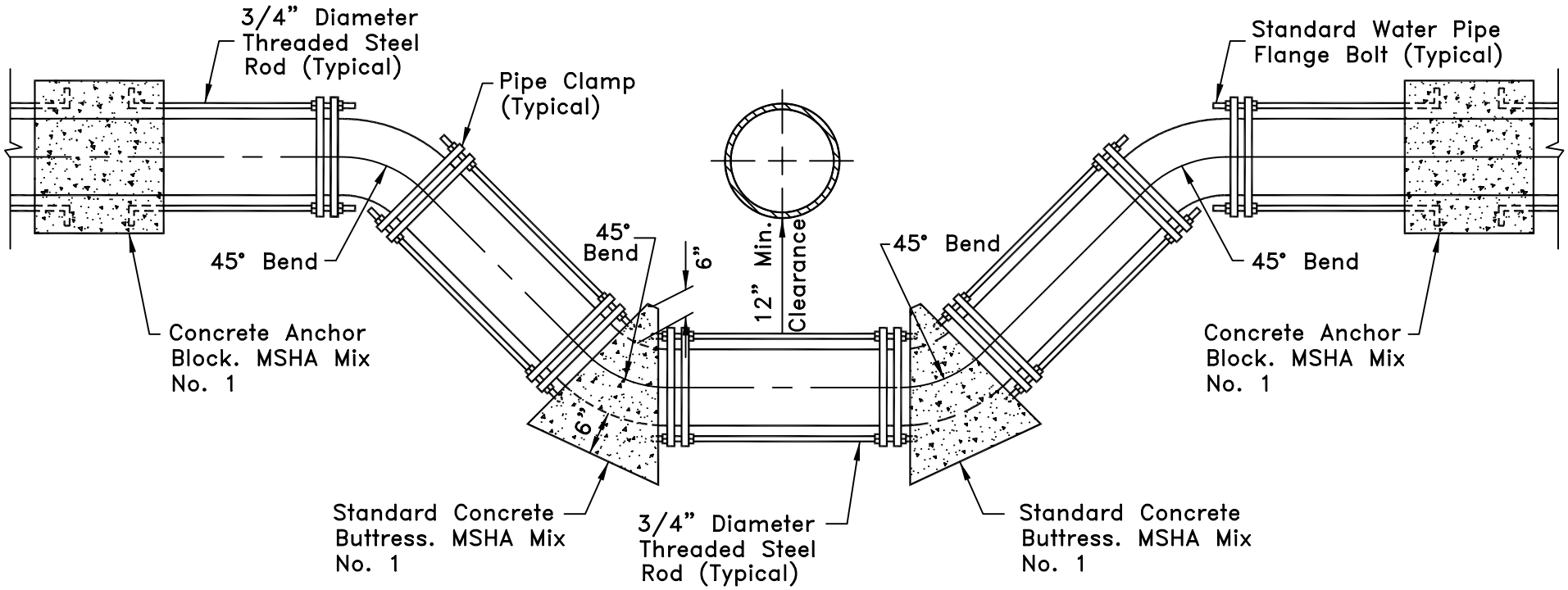

W–14	DRAWN BY: KAT SCALE: NONE	REVISIONS:		TYPICAL WATER MAIN VERTICAL OFFSET TYING DETAIL WATER	CITY OF FREDERICK Stan Aldridge 7-16-99 APPROVED DATE

CAD

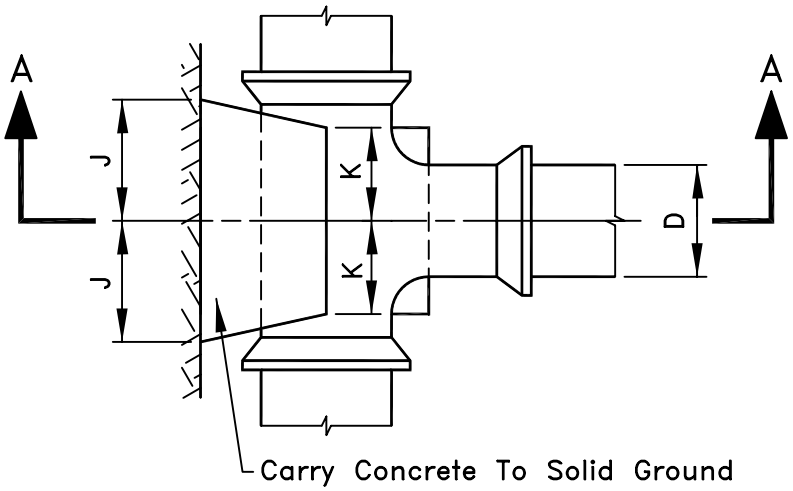

PLAN

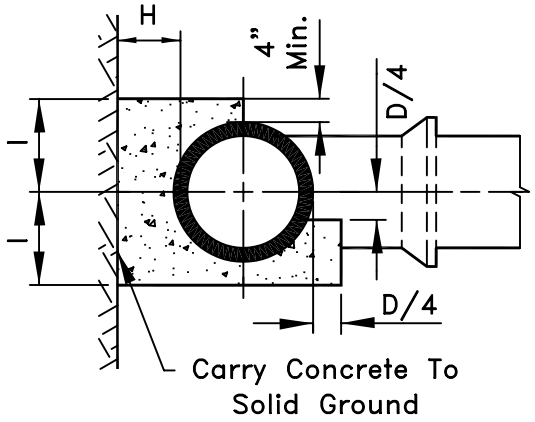

SECTION A–A

NOTES:

1. All Concrete To Be MSHA Mix No. 1.
2. Buttress Dimensions Shown Are Minimum Dimensions, Are Based Upon Soil Bearing Pressure Of 3000 psf And Static Water Pressure Of 150 psi. Where Pressure Exceeds 150 psi Or Where Soil Bearing Pressure Is Less Than 3000 psf Special Buttress Design Is Required.

BUTTRESS FOR TEES									
SIZE OF BRANCH									
D	6"	8"	10"	12"	16"	20"	24"	30"	36"
H	8"	9"	10"	1' 0"	1' 2"	1' 4"	1' 6"	1' 9"	2' 0"
I	8"	10"	1' 0"	1' 3"	1' 8"	2' 1"	2' 6"	3' 1"	3' 9"
J	7"	9"	1' 3"	1' 2"	1' 6"	1' 11"	2' 4"	2' 10"	3' 5"
K	6"	8"	8"	8"	10"	1' 2"	1' 4"	1' 6"	1' 10"

W–15	DRAWN BY: KAT SCALE: NONE	REVISIONS:	BUTTRESS FOR TEES	CITY OF FREDERICK Stan Aldridge APPROVED	7–16–99 DATE

CAD

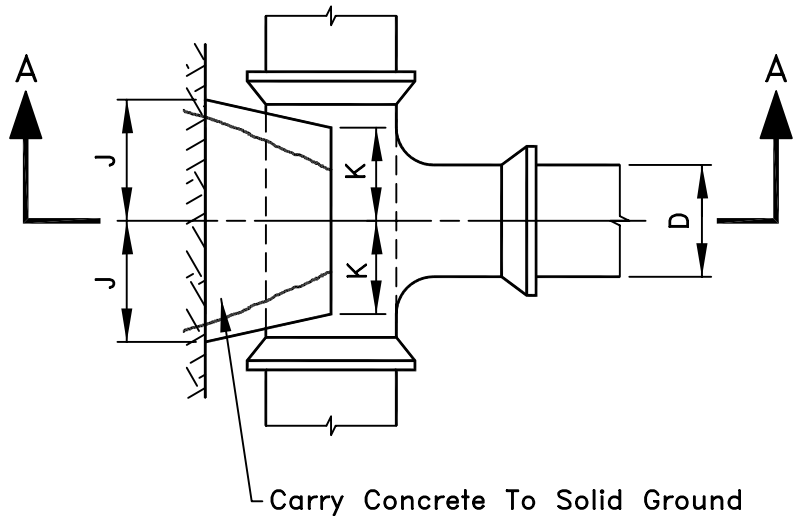

PLAN

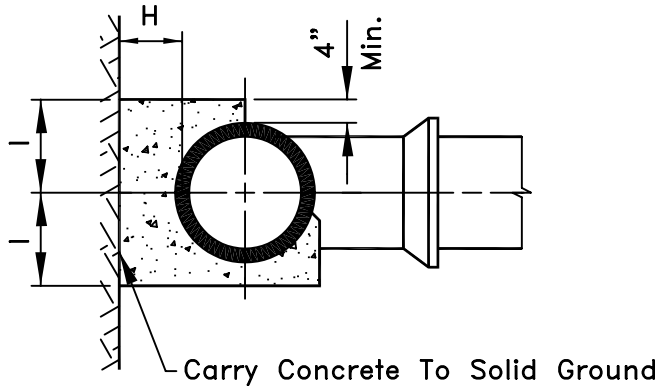

SECTION A–A

NOTES:

1. All Concrete To Be MSHA Mix No. 1.
2. Buttress Dimensions Shown Are Minimum Dimensions, Are Based Upon Soil Bearing Pressure Of 3000 psf And Static Water Pressure Of 150 psi. Where Pressure Exceeds 150 psi Or Where Soil Bearing Pressure Is Less Than 3000 psf Special Buttress Design Is Required.

BUTTRESS FOR COMPACT TEE FITTINGS				
SIZE OF BRANCH				
D	6"	8"	10"	12"
H	8"	9"	10"	12"
I	8"	10"	12"	15"
J	7"	9"	12"	14"
K	3"	4–1/2"	5–1/2"	7"

W–15a	DRAWN BY: KAT SCALE: NONE	REVISIONS:	BUTTRESS FOR COMPACT TEES	CITY OF FREDERICK Stan Aldridge APPROVED 7–16–99 DATE

CAD

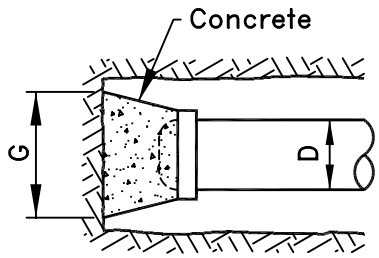

PLAN

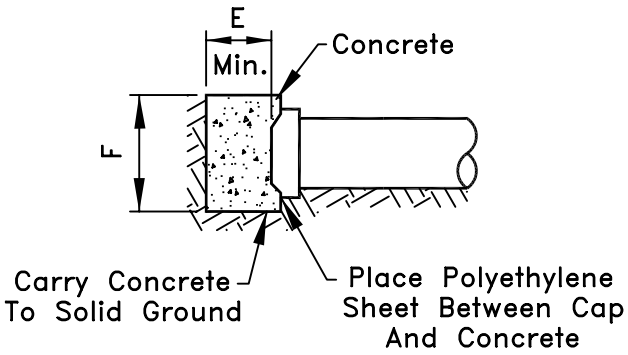

SECTION

NOTES:

1. All Concrete To Be MSHA Mix No. 1.
2. Buttress Dimensions Shown Are Minimum Dimensions Are Based Upon Soil Bearing Pressure Of 3000 p.s.f. And Static Water Pressure Of 150 p.s.i. Where Pressure Exceeds 150 p.s.i. Or Where Soil Bearing Pressure Is Less Than 3000 p.s.f. Special Buttress Design is Required.

BUTTRESS FOR CAPS

D	3"	4"	6"	8"	10"	12"	16"	20"	24"	30"	36"
E	7"	7"	6"	8"	8"	10"	1' 0"	1' 4"	1' 8"	2' 0"	2' 0"
F	14"	14"	1' 0"	1' 4"	1' 8"	2' 0"	2' 8"	3' 3"	4' 0"	4' 9"	5' 9"
G	12"	12"	1' 5"	1' 11"	2' 5"	2' 10"	3' 9"	4' 9"	5' 8"	7' 6"	8' 10"

W-16	DRAWN BY: KAT SCALE: NONE	REVISIONS:	BUTTRESS FOR CAPS	CITY OF FREDERICK Stan Aldridge APPROVED	7-16-99 DATE

CAD

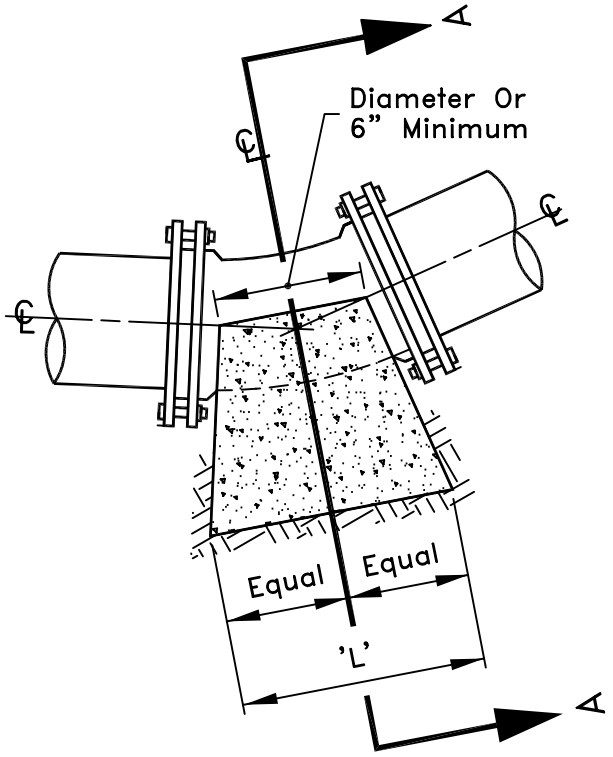

ELEVATION

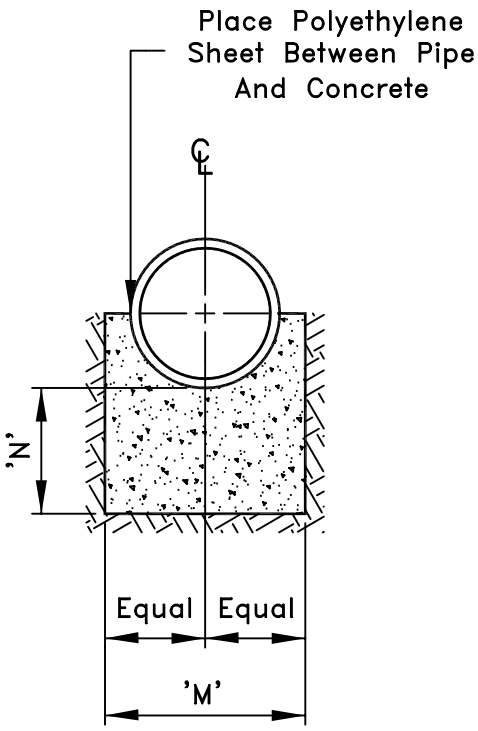

SECTION A–A

NOTES:

1. All Concrete To Be MSHA Mix No. 1.

2. All Bearing Surfaces Shall Be Placed Against Undisturbed Ground With A Minimum Soil Bearing Pressure Of 3000 Lbs. Per Square Foot.

3. These Buttresses Shall Be Used For Horizontal And Vertical Bends.

4. For Buttresses For Use At Horizontal And Vertical Bends Table Of Values See Detail Sheet W–17a.

CITY OF FREDERICK

APPROVED

7–16–99
DATE

BUTTRESSES FOR USE AT HORIZONTAL AND VERTICAL BENDS

REVISIONS:

DRAWN BY: KAT

SCALE: NONE

W–17

CAD

BUTTRESS DIMENSIONS

BEND		SIZE									
		3"	4"	6"	8"	10"	12"	16"	20"	24"	30"
11-1/4°	L	0'- 6"	0'- 6"	0'- 6"	0'- 8"	0'- 8"	0'- 8"	1'- 1"	1'- 5"	1'- 10"	2'- 8"
	M	1'- 0"	1'- 0"	1'- 2"	1'- 4"	1'- 6"	2'- 0"	2'- 4"	2'- 8"	3'- 0"	3'- 4"
1/32	N	0'- 8"	0'- 8"	0'- 8"	0'- 8"	0'- 8"	0'- 8"	0'- 9"	0'- 10"	1'- 0"	1'- 0"
22-1/2°	L	0'- 6"	0'- 8"	0'- 10"	0'- 11"	1'- 3"	1'- 4"	2'- 1"	2'- 9"	3'- 7"	5'- 3"
	M	1'- 0"	1'- 0"	1'- 2"	1'- 4"	1'- 6"	2'- 0"	2'- 4"	2'- 8"	3'- 0"	3'- 2"
1/16	N	0'- 8"	0'- 8"	0'- 8"	0'- 8"	0'- 9"	0'- 9"	1'- 0"	1'- 2"	1'- 4"	1'- 6"
45°	L	0'- 10"	1'- 0"	1'- 2"	1'- 9"	2'- 5"	2'- 8"	4'- 0"	5'- 6"	6'- 0"	8'- 2"
	M	1'- 0"	1'- 0"	1'- 2"	1'- 4"	1'- 6"	2'- 0"	2'- 4"	2'- 8"	3'- 6"	4'- 0"
1/8	N	0'- 8"	0'- 8"	0'- 8"	0'- 8"	1'- 0"	1'- 2"	1'- 6"	2'- 0"	2'- 6"	3'- 0"
90°	L	1'- 0"	1'- 4"	2'- 0"	2'- 8"	3'- 4"	3'- 8"	5'- 6"	6'- 8"	8'- 0"	9'- 8"
	M	0'- 9"	0'- 10"	1'- 0"	1'- 4"	1'- 9"	2'- 3"	2'- 8"	3'- 6"	4'- 0"	4'- 7"
1/4	N	1'- 8"	1'- 8"	1'- 8"	1'- 8"	1'- 8"	1'- 8"	2'- 0"	2'- 3"	2'- 9"	3'-5"

W-17a	DRAWN BY: KAT SCALE: NONE	REVISIONS:	BUTTRESSES FOR USE AT HORIZONTAL AND VERTICAL BENDS – TABLE OF VALUES	CITY OF FREDERICK Stan Aldridge APPROVED 7-16-99 DATE

CAD

Station Of Bend

Where Dimension "c" Is Listed On Tab Below, Anchorage And Straps Shall Be Provided At Each End Of Block As Shown. Where Dimension "c" Is Omitted, Use Anchorage On Bend Only.

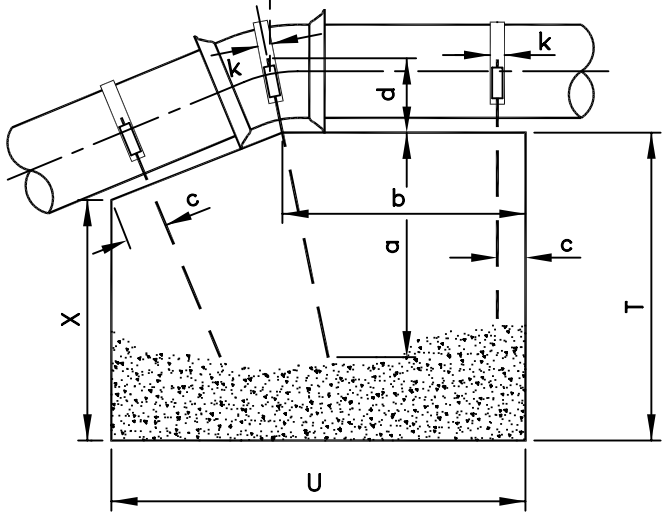

ELEVATION

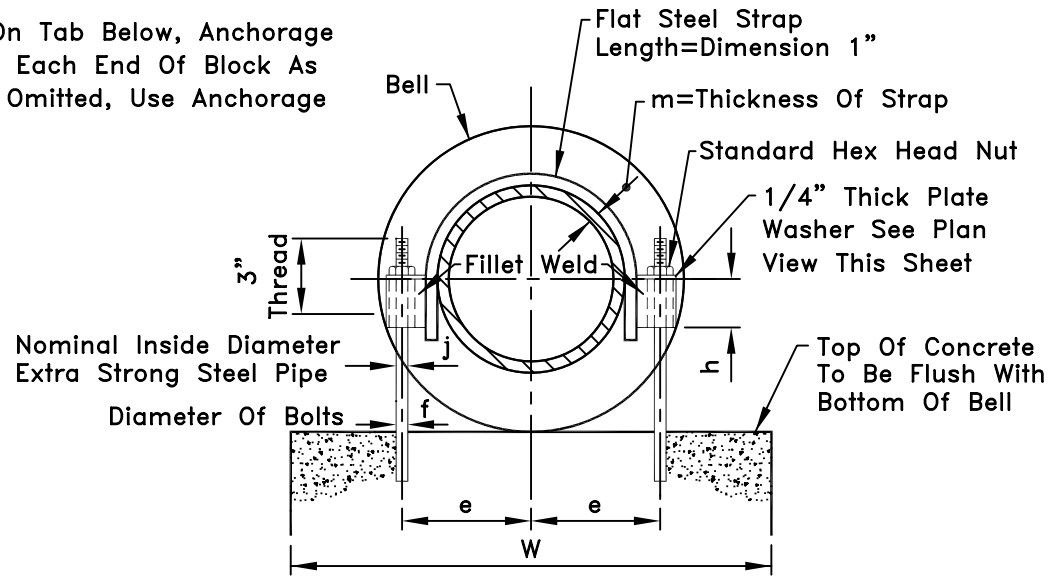

Standard 90° Hook On End Of Anchor Bolts To Face Center Of Block

CROSS SECTION

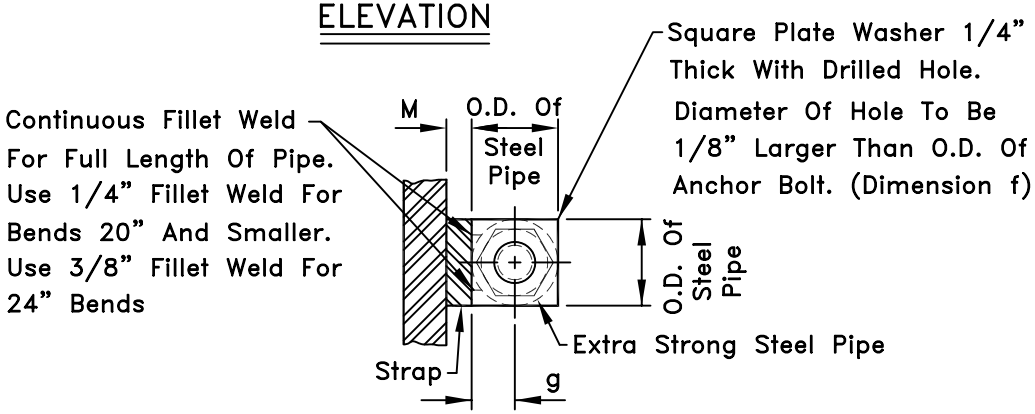

STRAP CONNECTION PLAN

NOTES:

1. For Table Of Values See Detail Sheet W-18a.
2. All Concrete To Be MSHA Mix No.1.
3. Carry All Bearing Surfaces To Solid Ground.
4. Anchorage Classified According To Pressure In Water Mains As Follows:
   a. Below 75 psi – MSHA Mix No. 2 Concrete.
   b. 76 psi To 100 psi – MSHA Mix No. 1 Concrete.
   c. 101 psi To 125 psi – MSHA Mix No. 1 Concrete.
5. Mechanical Joint Or Bell And Spigot Pipe.
6. Paint All Exposed Steel With 2 Coats Of Valdura Asphalt Paint Or Approved Equal.

W-18	DRAWN BY: KAT SCALE: NONE	REVISIONS:	ANCHORAGE-1/32 BEND UPPER VERTICAL STANDARD & COMPACT FITTINGS	CITY OF FREDERICK Stan Aldridge 7-16-99 APPROVED DATE

CAD

NOTES:

1. For Anchorage – 1/32 Bend Upper Vertical Detail Drawings See Standard Sheet W–18.

ANCHORAGE FOR–1/32 UPPER VERTICAL BENDS– STANDARD & COMPACT WATER FITTINGS

SIZE	4"	6"	8"	10"	12"	12"	16"	16"	16"	20"	20"	20"	24"	24"	24"
CLASS	C	C	C	C	A	C	A	B	C	A	B	C	A	B	C
T	1' 0"	1' 4"	1' 6"	1' 10"	2' 0"	2' 2"	2' 6"	2' 6"	2' 10"	2' 10"	3' 0"	3' 0"	3' 0"	3' 4"	3' 6"
U	1' 0"	1' 6"	1' 8"	2' 2"	2' 3"	2' 10"	3' 0"	3' 6"	3' 8"	3' 4"	3' 8"	4' 2"	3' 8"	4' 0"	4' 6"
W	1' 3"	1' 6"	2' 4"	2' 6"	2' 6"	2' 6"	2' 10"	2' 10"	2' 10"	3' 6"	3' 6"	3' 6"	4' 2"	4' 2"	4' 2"
X	0' 11"	1' 2–1/4"	1' 4"	1' 7–1/2"	1' 9–1/2"	1' 10–3/4"	2' 2–1/2"	2' 2–3/4"	2' 6"	2' 6–1/2"	2' 8"	2' 7–1/2"	2' 7–3/4"	2' 11–1/2"	3' 1"
Vol. Conc.	1.2cf	2.9cf	5.7cf	9.7cf	11.0cf	14.9cf	20.6cf	24.0cf	28.6cf	32.2cf	37.5cf	42.5cf	44.6cf	54.2cf	63.9cf
a	0' 8"	1' 0"	1' 2"	1' 6"	1' 8"	1' 10"	2' 0"	2' 0"	2' 4"	2' 4"	2' 6"	2' 6"	2' 6"	2' 10"	3' 0"
b	6–1/2"	9–1/2"	10"	1' 2"	1' 2"	1' 6"	1' 7"	1' 11"	2' 0"	1' 10"	2' 0"	2' 3"	1' 11"	2' 2"	5"
c	——	——	——	——	——	——	6"	6"	6"	6"	6"	6"	6"	6"	6"
d	6–1/2"	7–1/2"	8–1/2"	9–1/2"	10–3/4"	10–3/4"	13"	13"	13"	15–1/2"	15–1/2"	15–1/2"	17–3/4"	17–3/4"	18"
e	3–1/2"	4–9/16"	5–11/16"	6–3/4"	7–3/4"	7–3/4"	9–3/4"	9–3/4"	9–3/4"	11–11/16"	11–11/16"	12–1/16"	14–9/16"	14–9/16"	14–1/4"
f	3/4"	3/4"	3/4"	3/4"	3/4"	3/4"	3/4"	3/4"	3/4"	3/4"	3/4"	7/8"	7/8"	7/8"	1"
g	3/4"	3/4"	3/4"	3/4"	3/4"	3/4"	3/4"	3/4"	3/4"	3/4"	3/4"	7/8"	7/8"	7/8"	15/16"
h	1"	1"	1"	1"	1–1/4"	1–1/4"	1–1/2"	2"	2"	2–1/2"	2–1/4"	3"	4"	4"	4"
j	1"	1"	1"	1"	1"	1"	1"	1"	1"	1"	1"	1–1/4"	1–1/4"	1–1/4"	1–1/2"
k	1–1/4"	1–1/4"	1–1/4"	1–1/4"	1–1/4"	1–1/4"	1–1/2"	2"	2"	2"	2"	2"	2"	2–1/2"	2–1/2"
l	12–1/4"	15–3/4"	19"	22–1/4"	26–1/8"	26–1/8"	33–3/4"	33–3/4"	33–3/4"	42–1/8"	42–1/8"	42–1/8"	51–1/8"	51–1/8"	51–1/8"
m	1/4"	1/4"	1/4"	1/4"	1/4"	1/4"	1/4"	1/4"	1/4"	3/8"	3/8"	3/8"	3/8"	3/8"	3/8"
Number Bolts Each Side	1	1	1	1	1	1	3	3	3	3	3	3	3	3	3

W–18a	DRAWN BY: KAT SCALE: NONE	REVISIONS:	TABLE OF VALUES ANCHORAGE 1/32 BEND–UPPER VERTICAL STANDARD & COMPACT FITTINGS	CITY OF FREDERICK Stan Aldridge APPROVED 7–16–99 DATE

CAD

For Bends 10" And Smaller, Use One Strap On Bend With Anchor Bolt On ℄ C Of Bend. For Bends 12" And Larger. Two Straps Shall Be Used On Bend And Bracing Straps On Pipe As Shown.

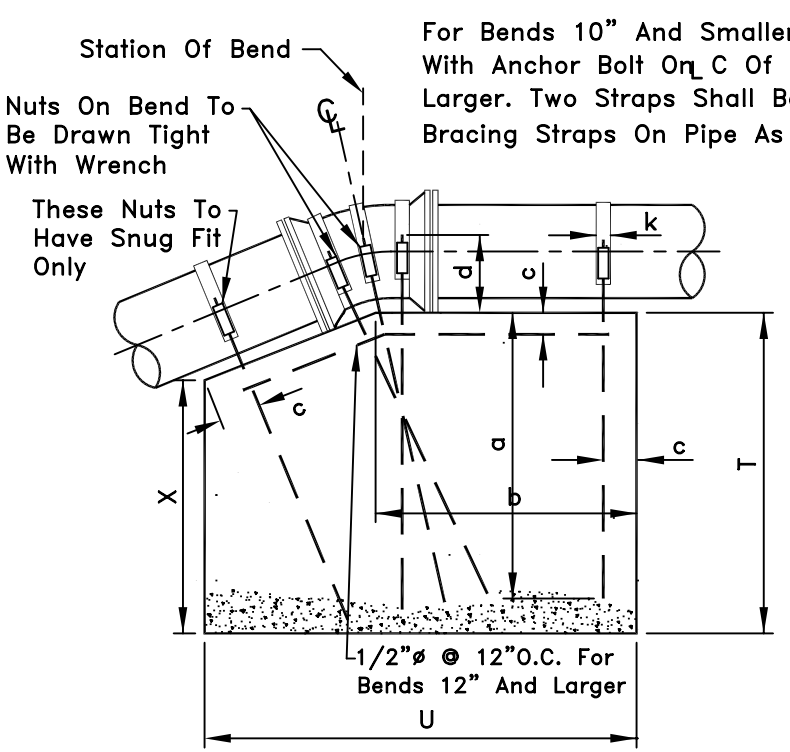

ELEVATION

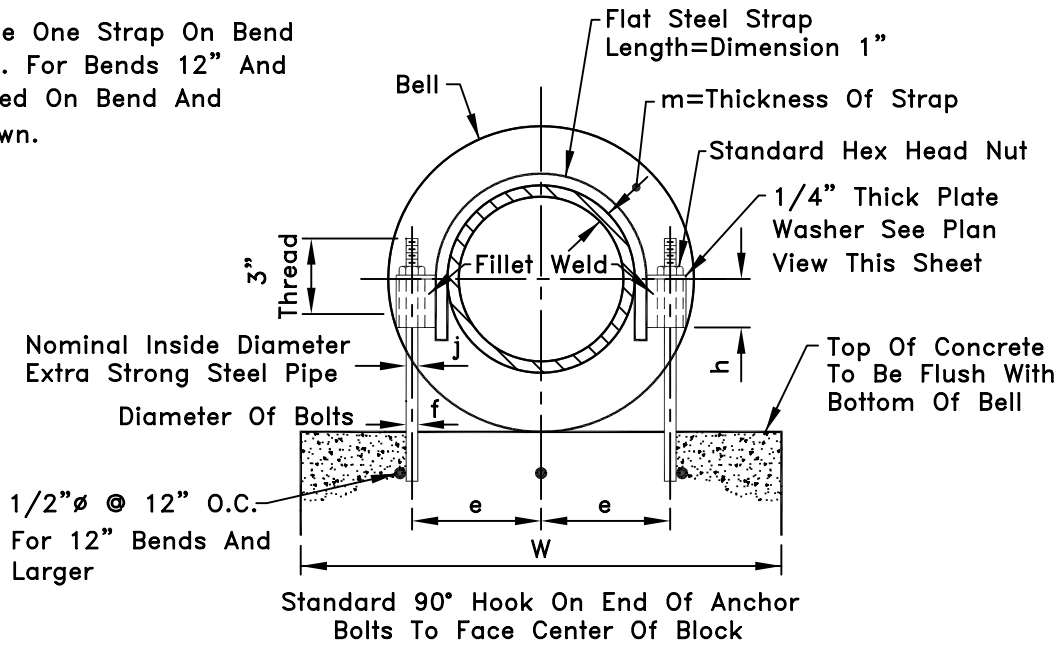

CROSS SECTION

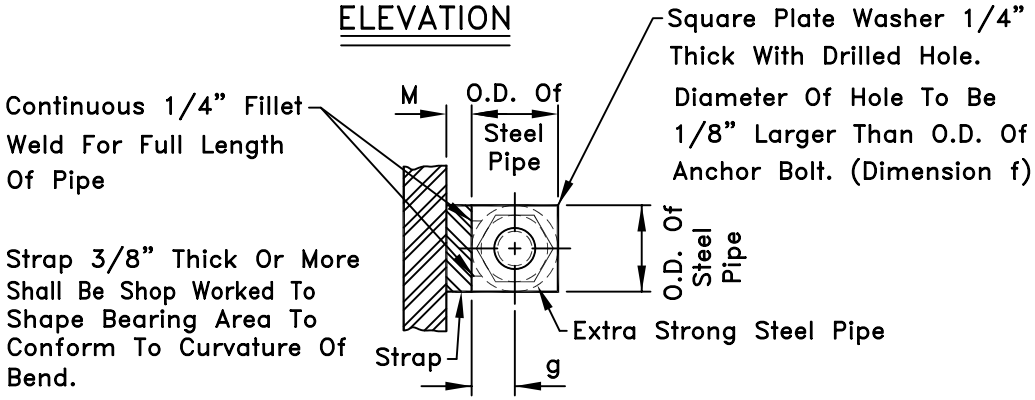

STRAP CONNECTION PLAN

NOTES:

1. For Table Of Values See Detail Sheet W-19a.
2. All Concrete To Be MSHA Mix No.1.
3. Carry All Bearing Surfaces To Solid Ground.
4. Anchorage Classified According To Pressure In Water Mains As Follows:
   a. Below 75 psi – MSHA Mix No. 2 Concrete.
   b. 76 psi To 100 psi – MSHA Mix No. 1 Concrete.
   c. 101 psi To 125 psi – MSHA Mix No. 1 Concrete.
5. Paint All Exposed Steel With 2 Coats Of Valdura Asphalt Paint Or Approved Equal.

W-19	DRAWN BY: KAT SCALE: NONE	REVISIONS:		ANCHORAGE-1/16 BEND UPPER VERTICAL STANDARD & COMPACT FITTINGS	CITY OF FREDERICK Stan Aldridge 7-16-99 APPROVED DATE

CAD

NOTES:

1. For Anchorage – 1/16 Bend Upper Vertical Detail Drawings See Standard Sheet W–19.

ANCHORAGE FOR – 1/16 UPPER VERTICAL BENDS– STANDARD & COMPACT WATER FITTINGS

SIZE	4"	6"	8"	8"	10"	10"	12"	12"	12"	16"	16"	16"	20"	20"	20"	24"	24"	24"
CLASS	C	C	A	C	A	C	A	B	C	A	B	C	A	B	C	A	B	C
T	1' 3"	1' 8"	2' 0"	2' 2"	2' 6"	3' 0"	3' 0"	3' 0"	3' 0"	3' 0"	3' 0"	3' 6"	3' 6"	3' 6"	4' 0"	4' 0"	4' 6"	4' 8"
U	1' 6"	1' 10"	2' 3"	2' 9"	3' 2"	3' 8"	4' 0"	4' 0"	4' 2"	5' 0"	5' 9"	6' 0"	5' 9"	6' 3"	6' 8"	7' 0"	7' 0"	7' 6"
W	1' 6"	2' 6"	2' 6"	2' 6"	2' 6"	2' 6"	2' 6"	2' 9"	3' 0"	3' 3"	3' 3"	3' 3"	3' 9"	4' 0"	4' 0"	4' 0"	4' 4"	4' 6"
X	11–1/2"	1' 4"	1' 7"	1' 7–3/4"	1' 9"	2' 3–1/4"	2' 3"	2' 3"	2' 2–1/2"	2' 1/2"	1' 11"	2' 4–1/4"	2' 5"	2' 3–1/2"	2' 8–1/2"	2' 8"	3' 2"	3' 3"
Vol. Conc.	2.7cf	7.3cf	10.8cf	14.1cf	18.8cf	26.1cf	28.3cf	31.1cf	35.2cf	45.0cf	51.2cf	63.1cf	69.9cf	80.5cf	98.7cf	103.3cf	127.0cf	147.6cf
a	0' 11"	1' 4"	1' 8"	1' 10"	2' 0"	2' 6"	2' 6"	2' 6"	2' 6"	2' 6"	2' 6"	3' 0"	3' 0"	3' 0"	3' 6"	3' 6"	4' 0"	4' 2"
b	9–1/2"	1' 10"	1' 3"	1' 6"	1' 9"	2' 0"	2' 2"	2' 2"	2' 3"	2' 8"	3' 1"	3' 3"	3' 1"	3' 2"	3' 7"	3' 9"	3' 9"	4' 1"
c	——	——	——	——	——	——	6"	6"	6"	6"	6"	6"	6"	6"	6"	6"	6"	6"
d	6–1/2"	7–1/2"	8–1/2"	8–1/2"	9–1/2"	9–1/2"	10–3/4"	10–3/4"	10–3/4"	13"	13"	13"	15–1/2"	15–1/2"	15–1/2"	17–3/4"	17–3/4"	18"
e	3–1/2"	4–3/16"	5–11/16"	5–11/16"	6–3/4"	6–3/4"	7–3/4"	7–3/4"	7–3/4"	9–3/4"	9–3/4"	9–3/4"	11–13/16"	11–13/16"	12–1/16"	14–3/16"	14–3/16"	14–1/4"
f	3/4"	3/4"	3/4"	3/4"	3/4"	3/4"	3/4"	3/4"	3/4"	3/4"	3/4"	3/4"	3/4"	3/4"	7/8"	7/8"	7/8"	1"
g	3/4"	3/4"	3/4"	3/4"	3/4"	3/4"	3/4"	3/4"	3/4"	3/4"	3/4"	3/4"	3/4"	3/4"	7/8"	7/8"	7/8"	15/16"
h	1"	1"	1"	1–1/4"	1–1/2"	2"	1–1/4"	1–1/4"	1–1/2"	1–3/4"	2"	2–1/4"	2–1/2"	3"	3–1/2"	3–1/2"	4–1/4"	5"
j	1"	1"	1"	1"	1"	1"	1"	1"	1"	1"	1"	1"	1"	1"	1–1/4"	1–1/4"	1–1/4"	1–1/2"
k	1–1/4"	1–1/4"	1–1/4"	1–1/4"	1–1/4"	2"	1–1/4"	1–1/4"	1–1/4"	2"	2"	2"	2"	2"	2"	2–1/2"	2–1/2"	2–1/2"
l	12–1/4"	15–1/2"	19–1/2"	19–1/2"	24"	24"	26–1/2"	26–1/2"	26–1/2"	34"	34"	34"	43"	43"	43"	50"	53"	53"
m	1/4"	1/4"	1/4"	1/4"	1/4"	1/4"	1/4"	1/4"	1/4"	1/4"	1/4"	1/4"	3/8"	3/8"	3/8"	3/8"	3/8"	3/8"
Number Bolts Each Side	1	1	1	1	1	1	4	4	4	4	4	4	4	4	4	4	4	4

W–19a	DRAWN BY: KAT SCALE: NONE	REVISIONS:	TABLE OF VALUES ANCHORAGE 1/16 BEND–UPPER VERTICAL STANDARD & COMPACT FITTINGS

CITY OF FREDERICK

Stan Aldridge — APPROVED

7–16–99 — DATE

CAD

For Bends 8" And Smaller, Use One Strap On Bend With Anchor Bolt On ℄ Of Bend. For Bend 10" To 16" Incl., Use Two Straps On Bends Adjacent To Bells. For Bends 20" And Larger, Use Three Straps On Bends As Shown.

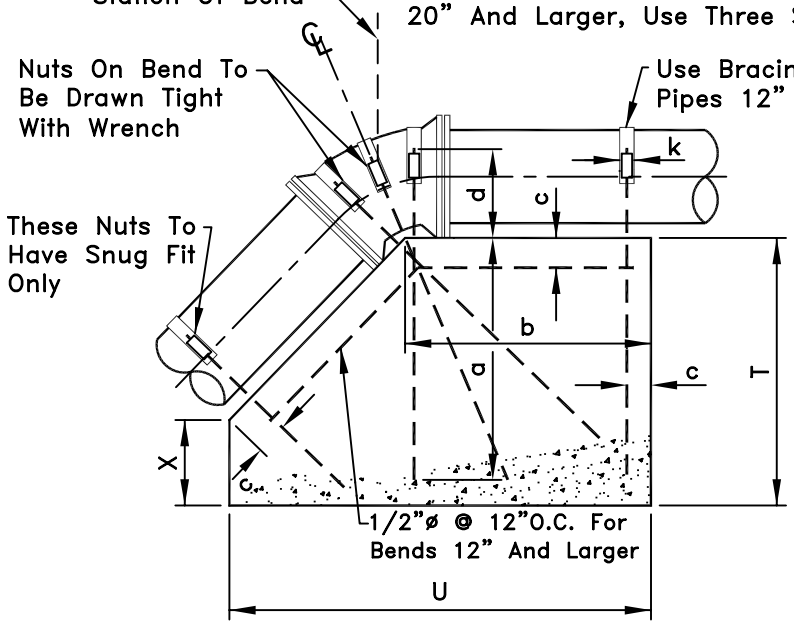

ELEVATION

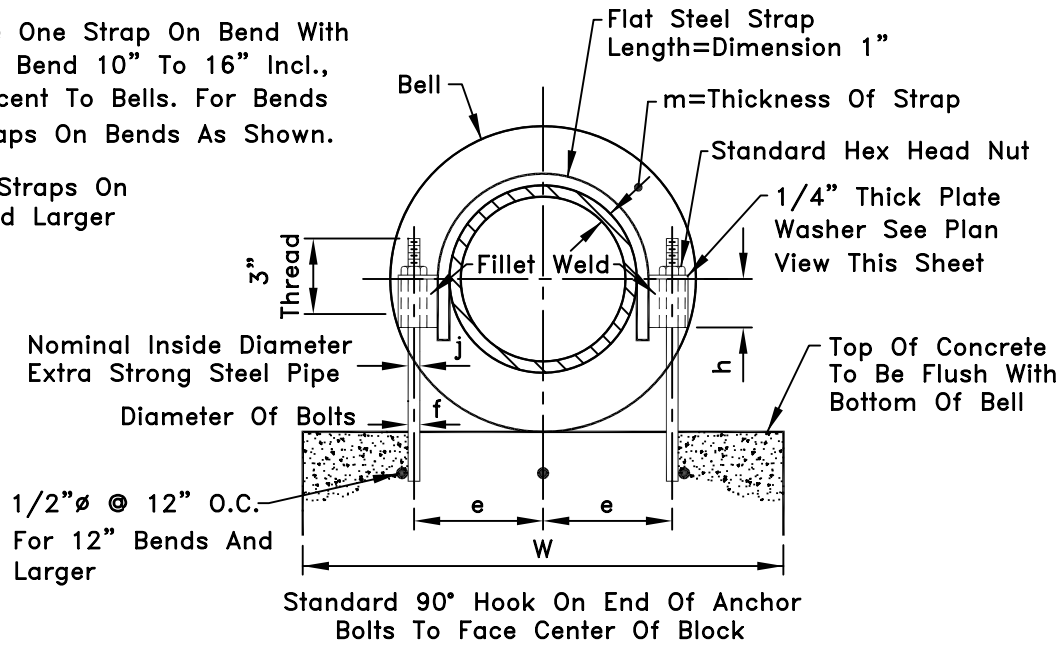

CROSS SECTION

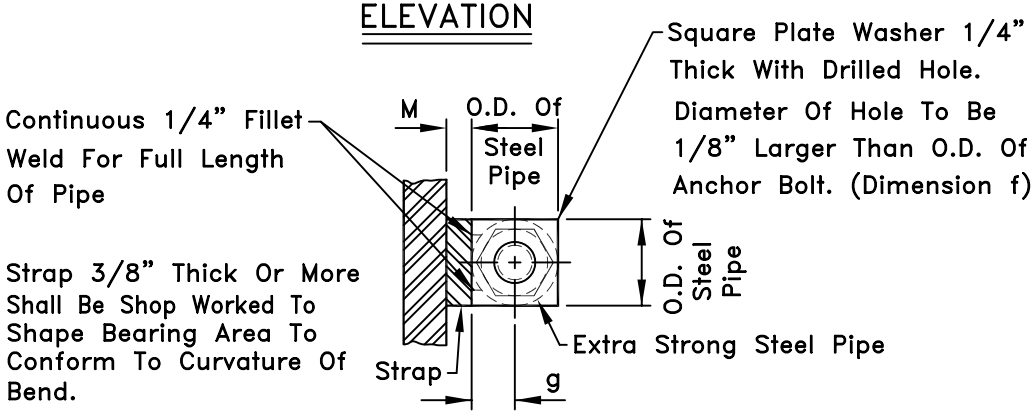

STRAP CONNECTION PLAN

NOTES:

1. For Table Of Values See Detail Sheet W-20a
2. All Concrete To Be MSHA Mix No.1.
3. Carry All Bearing Surfaces To Solid Ground.
4. Anchorage Classified According To Pressure In Water Mains As Follows:
   a. Below 75 psi – MSHA Mix No. 2 Concrete.
   b. 76 psi To 100 psi – MSHA Mix No. 1 Concrete.
   c. 101 psi To 125 psi – MSHA Mix No. 1 Concrete.
5. Paint All Exposed Steel With 2 Coats Of Valdura Asphalt Paint Or Approved Equal.

W-20	DRAWN BY: KAT SCALE: NONE	REVISIONS:		ANCHORAGE-1/8 BEND UPPER VERTICAL STANDARD & COMPACT FITTINGS	CITY OF FREDERICK Stan Aldridge APPROVED 7-16-99 DATE

CAD

NOTES: 1. For Anchorage – 1/8 Bend Upper Vertical Detail Drawings See Standard Sheet W–20.

ANCHORAGE FOR–1/8 UPPER VERTICAL BENDS– STANDARD & COMPACT WATER FITTINGS

SIZE	4"	6"	6"	8"	8"	10"	10"	12"	12"	12"	16"	16"	16"	20"	20"	20"	24"	24"	24"
CLASS	C	A	C	A	C	A	C	A	B	C	A	B	C	A	B	C	A	B	C
T	1' 6"	2' 0"	2' 3"	3' 6"	3' 9"	3' 9"	4' 0"	4' 0"	4' 6"	5' 0"	5' 0"	5' 2"	5' 6"	5' 6"	5' 6"	6' 0"	6' 0"	6' 0"	6' 4"
U	1' 9"	2' 9"	3' 3"	3' 6"	4' 3"	4' 3"	5' 3"	5' 8"	6' 0"	6' 3"	6' 3"	6" 6"	7' 0"	7' 0"	7' 8"	8' 3"	8' 3"	8' 6"	9' 3"
W	2' 6"	2' 6"	2' 6"	2' 6"	2' 6"	3' 0"	3' 0"	3' 0"	3' 0"	3' 0"	4' 0"	4' 3"	4' 3"	4' 9"	5' 0"	5' 0"	5' 4"	6' 0"	6' 0"
X	0' 9"	1' 0"	1' 1"	2' 3"	2' 4"	2' 4"	2' 4"	2' 1"	2' 4"	2' 7"	2' 7"	2' 9"	3' 1"	3' 1"	2' 10"	3' 1"	3' 1"	3' 0"	3' 4"
Vol. Conc.	6.0cf	12.5cf	16.6cf	28.7cf	37.4cf	44.8cf	59cf	62.5cf	74cf	85cf	113cf	131cf	151cf	169cf	193cf	226cf	241cf	279cf	324cf
a	1' 2"	1' 8"	1' 11"	3' 0"	3' 3"	3' 3"	3' 6"	3' 6"	4' 0"	4' 6"	4' 6"	4' 8"	5' 0"	5' 0"	5' 0"	5' 6"	5' 6"	5' 6"	5' 10"
b	1' 0"	1' 9"	2' 1"	2' 3"	2' 10"	2' 10"	3' 7"	3' 9"	3' 10"	3' 10"	3' 10"	4' 1"	4' 7"	4' 7"	5' 0"	5' 4"	5' 4"	5' 6"	6' 3"
c	—	—	—	—	—	—	—	6"	6"	6"	6"	6"	6"	6"	6"	6"	6"	6"	6"
d	6–1/2"	7–1/2"	7–1/2"	8–1/2"	8–1/2"	9–1/2"	9–1/2"	10–3/4"	10–3/4"	10–3/4"	13–1/4"	13–1/4"	13–3/4"	15–1/2"	15–1/2"	15–1/2"	18"	18"	18"
e	3–1/2"	4–9/16"	4–9/16"	5–11/16"	5–11/16"	6–3/4"	6–3/4"	7–3/4"	7–3/4"	7–7/8"	10"	10"	10–1/16"	12–1/16"	12–9/16"	12–1/4"	14–3/8"	14–3/8"	14–9/16"
f	3/4"	3/4"	3/4"	3/4"	3/4"	3/4"	3/4"	3/4"	3/4"	3/4"	7/8"	7/8"	1"	7/8"	7/8"	1"	1"	1"	1–1/4"
g	3/4"	3/4"	3/4"	3/4"	3/4"	3/4"	3/4"	3/4"	3/4"	3/4"	7/8"	7/8"	15/16"	7/8"	7/8"	15/16"	15/16"	15/16"	11/8"
h	1"	1–1/4"	1–1/2"	2"	2–1/2"	1–1/2"	2"	2"	2–1/4"	2–1/2"	3–1/2"	4"	4–1/4"	3–1/2"	4"	4–1/2"	4–3/4"	5–1/2"	6"
j	1"	1"	1"	1"	1"	1"	1"	1"	1"	1"	1–1/4"	1–1/4"	1–1/2"	1–1/4"	1–1/4"	1–1/2"	1–1/2"	1–1/2"	1–1/2"
k	1–1/4"	1–1/4"	1–1/4"	2"	2"	2"	2"	2"	2"	2"	2"	2–1/2"	2–1/2"	2"	2"	2"	2"	2–1/2"	2–1/2"
l	12–1/4"	16–1/2"	16–1/2"	22"	22"	24"	24"	28"	28"	29"	37"	38"	38"	44"	45"	46"	53"	54"	55"
m	1/4"	1/4"	1/4"	1/4"	1/4"	1/4"	1/4"	1/4"	1/4"	3/8"	3/8"	3/8"	3/8"	3/8"	1/2"	1/2"	1/2"	1/2"	1/2"
No. Bolts Each Side	1	1	1	1	1	2	2	4	4	4	4	4	4	5	5	5	5	5	5

W–20a

DRAWN BY: KAT

SCALE: NONE

REVISIONS:

TABLE OF VALUES ANCHORAGE
1/8 BEND–UPPER VERTICAL
STANDARD & COMPACT FITTINGS

CITY OF FREDERICK

Stan Aldridge
APPROVED

7–16–99
DATE

CAD

OPEN

W-21	DRAWN BY: SCALE: NONE	REVISIONS:			CITY OF FREDERICK APPROVED DATE

CAD

OPEN

W-22	DRAWN BY: SCALE: NONE	REVISIONS:			CITY OF FREDERICK APPROVED DATE

CAD

OPEN

W-23	DRAWN BY: SCALE: NONE	REVISIONS:			CITY OF FREDERICK APPROVED DATE

CAD

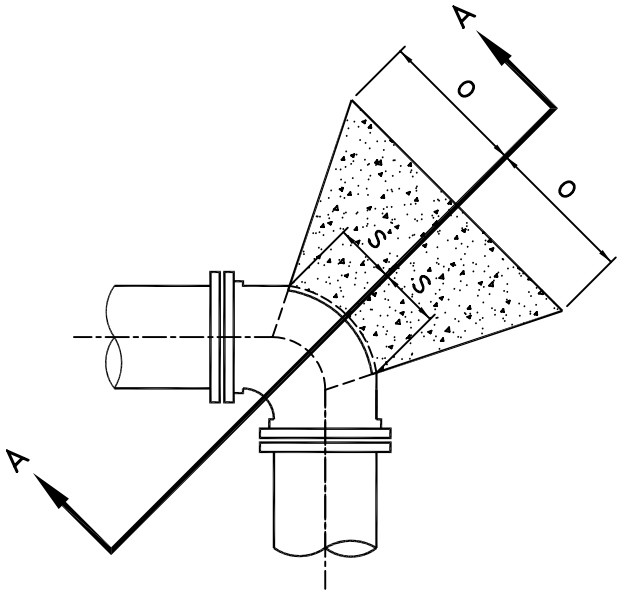

PLAN

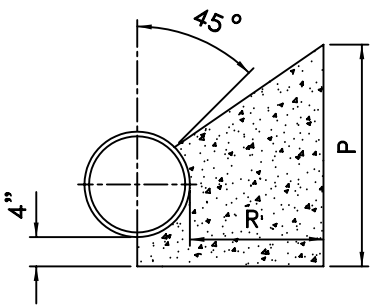

SECTION A–A

NOTES:

1. Carry All Bearing Surfaces To Solid Ground.
2. Use MSHA Mix No. 1 Concrete.
3. Maximum Static Pressure Shall Not Exceed 125p.s.i.

Size	R	P	O	*S	
3"	21"	9"	6"	3"	(1")
3"	21"	10"	8"	4"	(1–1/2")
4"	20"	12"	12"	6"	(3")
8"	20"	16"	16"	6"	(3–1/2")
10"	20"	21"	20"	9"	(4–1/2")
12"	20"	27"	22"	10"	(7)
14"	21"	30"	27"	12"	
16"	24"	30"	33"	14"	
18"	27"	36"	36"	15"	
20"	27"	42"	36"	16"	
24"	33"	44"	44"	20"	

* S–Value In ( ) Symbols Are For Compact Water Fittings Only

W–24	DRAWN BY: KAT SCALE: NONE	REVISIONS:		BUTTRESSES FOR 1/4 HORIZONTAL BENDS STANDARD & COMPACT FITTINGS	CITY OF FREDERICK APPROVED — 05–31–06 DATE

CAD

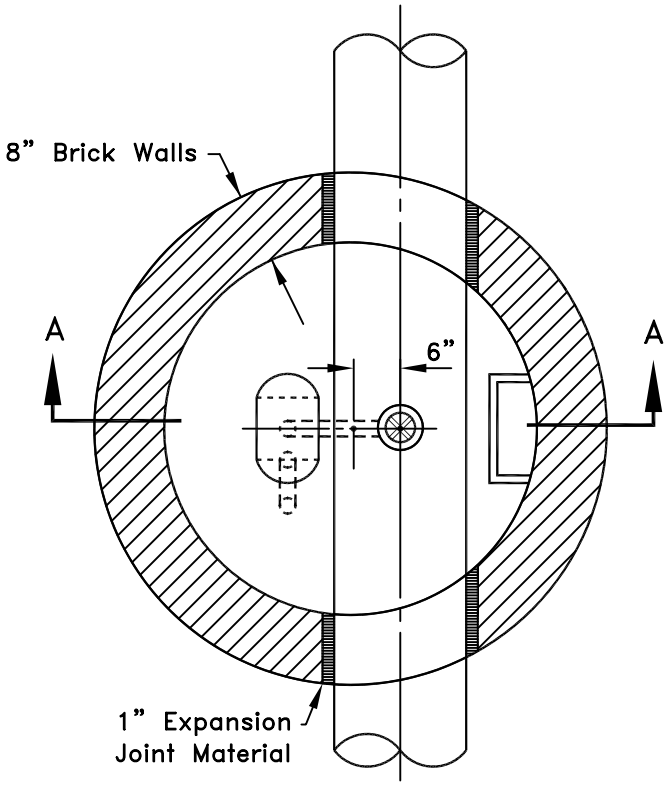

PLAN

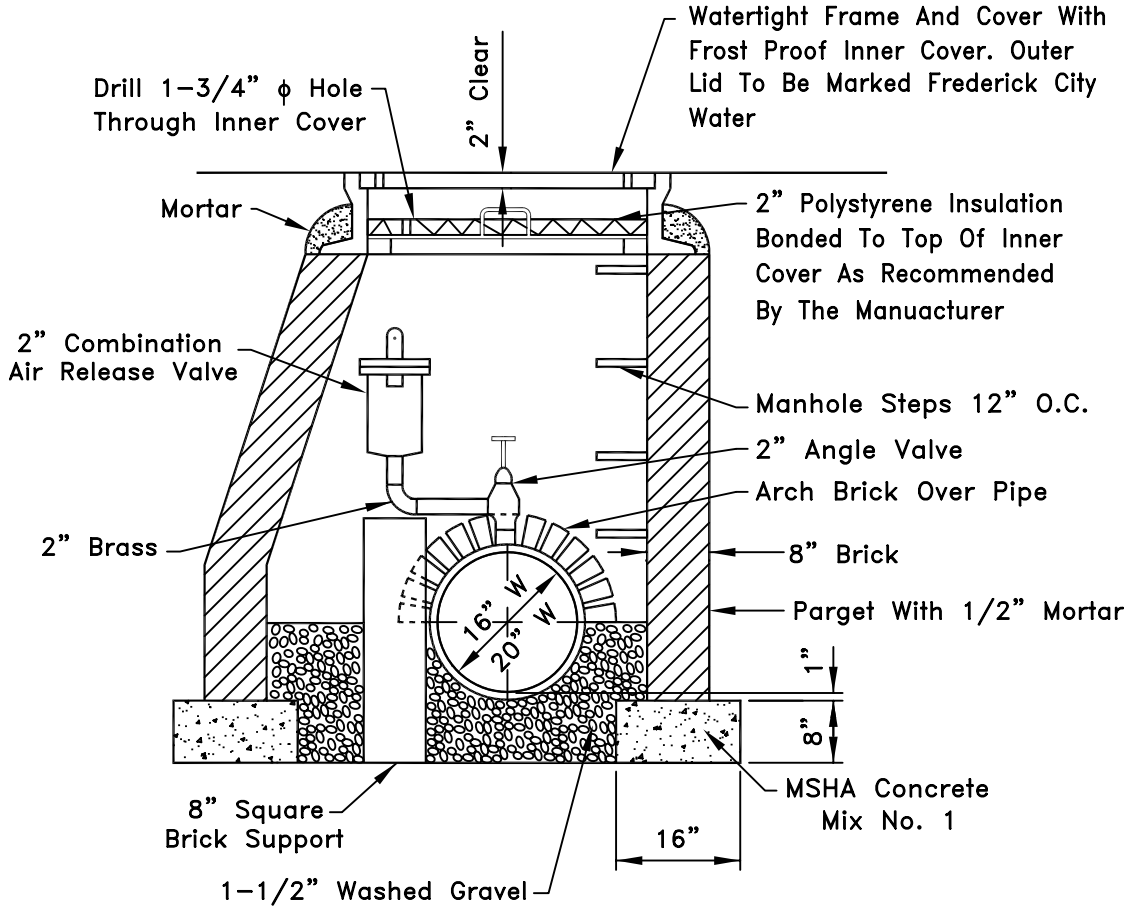

SECTION A-A

W-25	DRAWN BY: KAT SCALE: NONE	REVISIONS:		AIR RELEASE VALVE MANHOLE WATER	CITY OF FREDERICK Stan Aldridge 7-16-99 APPROVED DATE

CAD

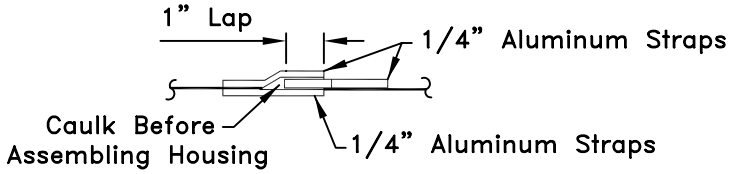

TOP SEAM

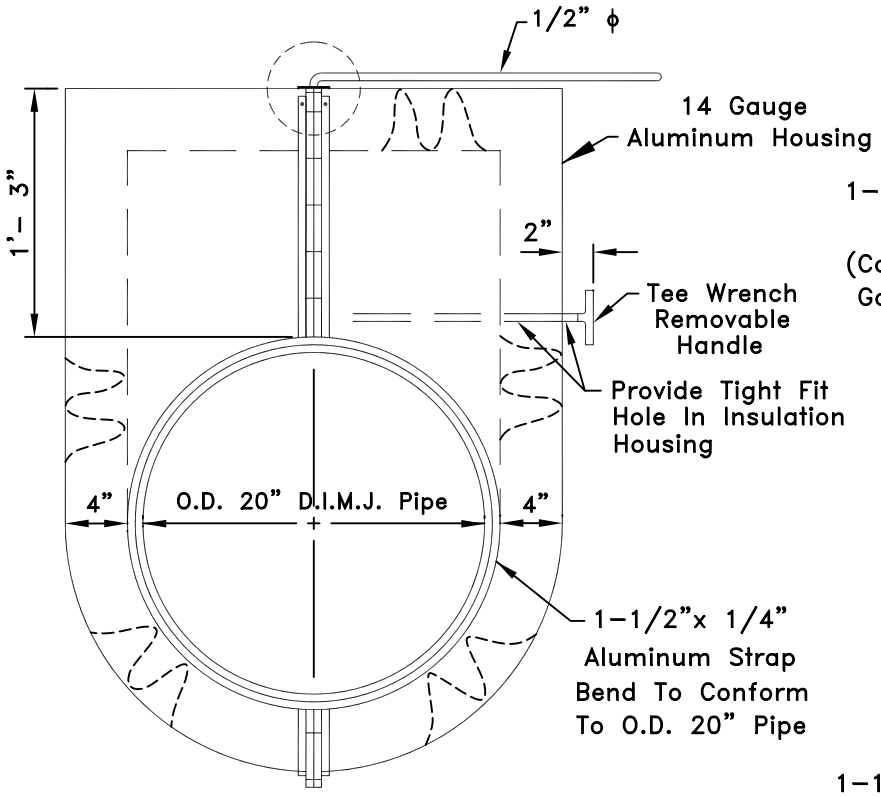

ELEVATION

NOTES:

1. Aluminum Angles And Straps To Be Welded To Aluminum Housing.

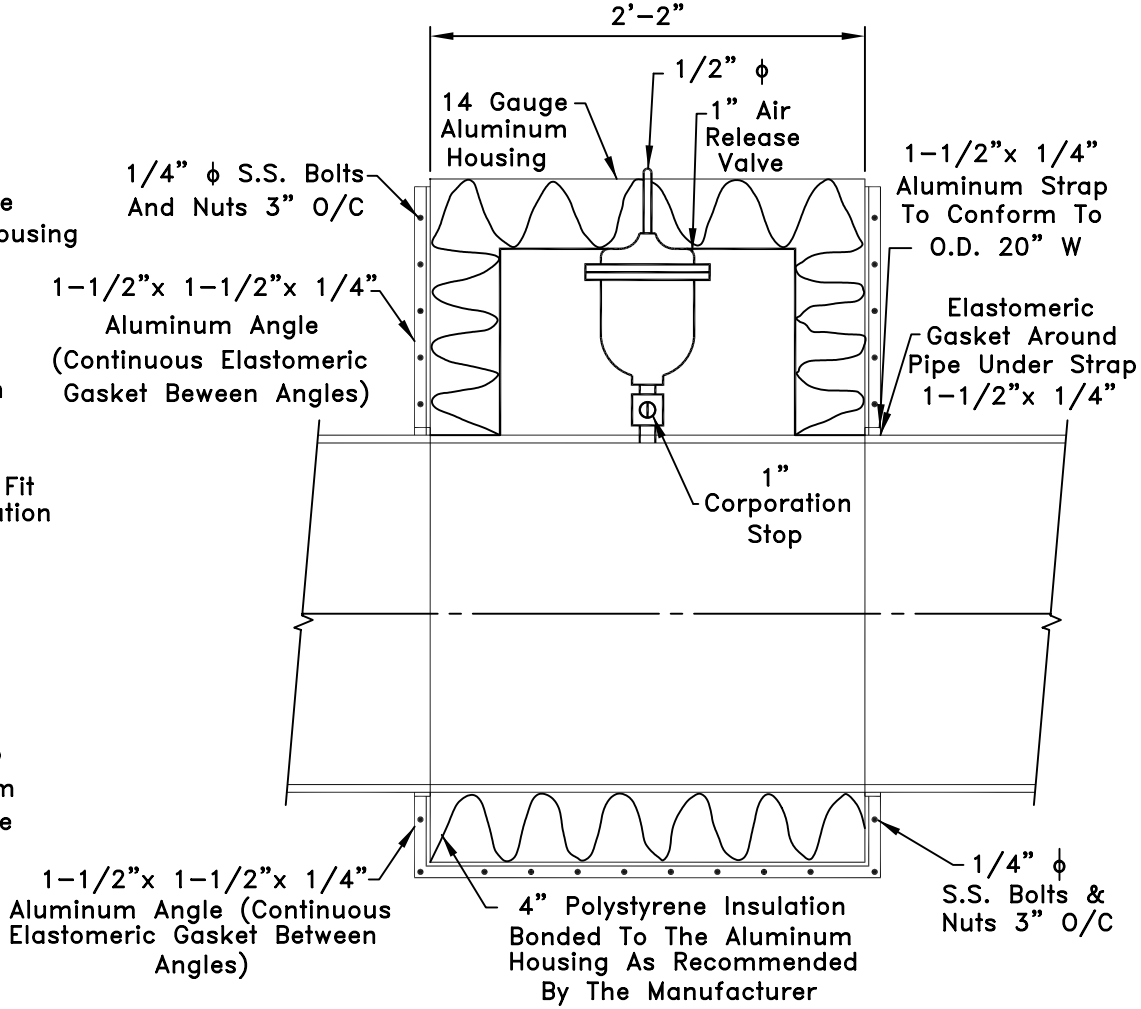

SECTION

W-26	DRAWN BY: KAT SCALE: NONE	REVISIONS:		SPECIAL AIR RELEASE VALVE WATER	CITY OF FREDERICK Stan Aldridge 7-16-99 APPROVED DATE

CAD

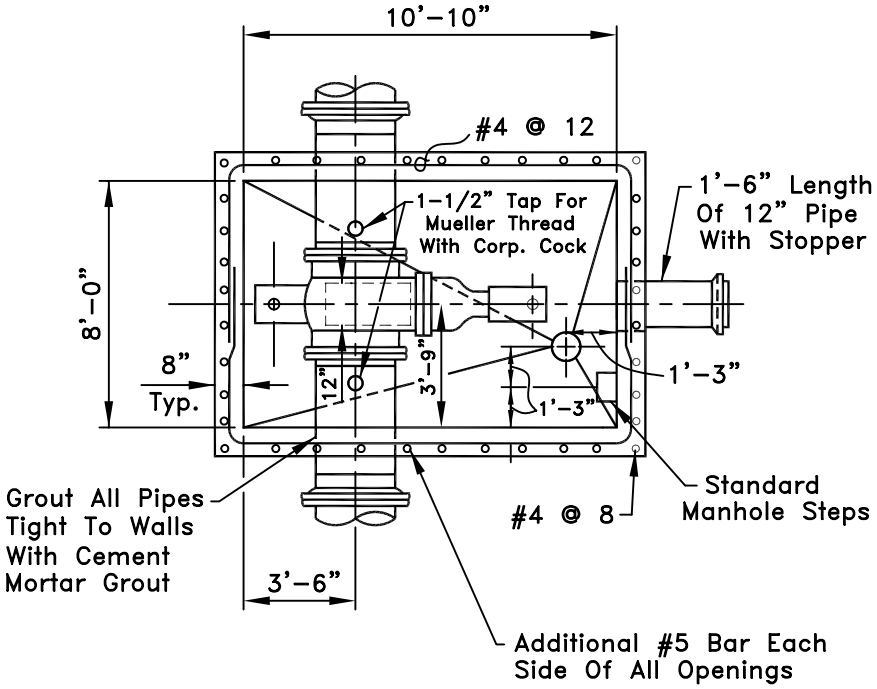

PLAN – TOP SLAB REMOVED

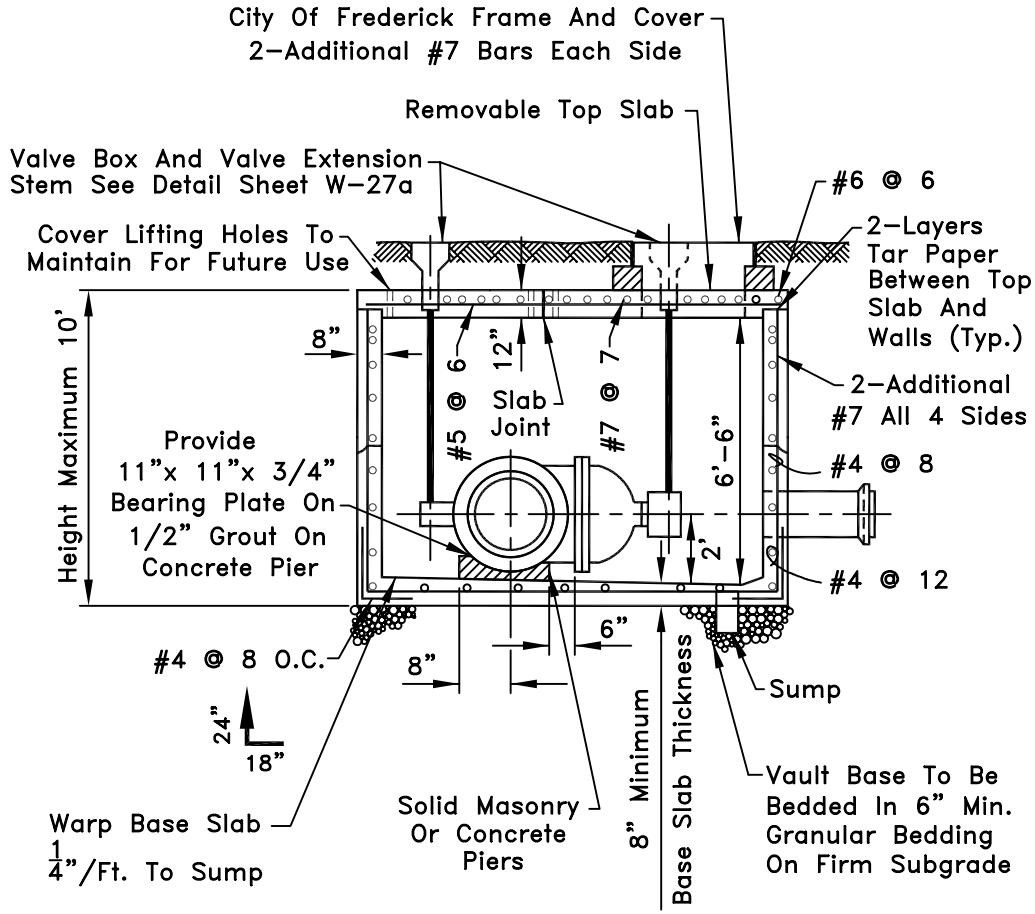

SECTION

W-27	DRAWN BY: KAT SCALE: NONE	REVISIONS:		STANDARD CONCRETE VALVE VAULT FOR VALVES 16"-24"	CITY OF FREDERICK Stan Aldridge 7-16-99 APPROVED DATE

CAD

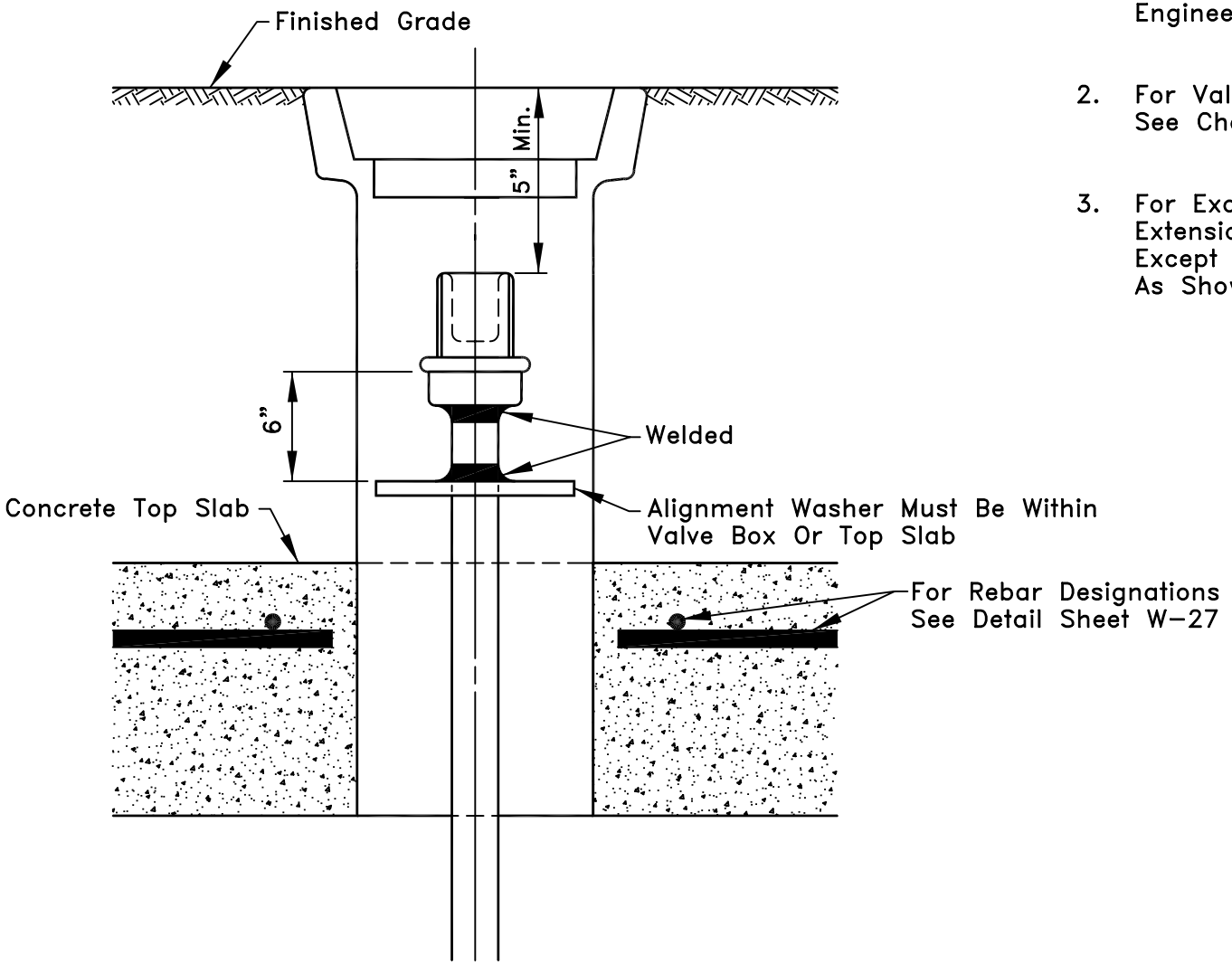

NOTES:

1. Materials To Be Supplied By The General Engineering Co. Or Approved Equal.

2. For Valve Extension Stem Dimensions See Chart On Detail Sheet W-29a.

3. For Exact Specifications Of The Valve Extension Stem See Detail Sheet W-29c, Except For Minimum Dimension To Grade As Shown On This Detail Sheet.

W-27a	DRAWN BY: KAT SCALE: NONE	REVISIONS:		STANDARD CONCRETE VALVE VAULT EXTENSION STEM DETAIL	CITY OF FREDERICK Stan Aldridge 7-16-99 APPROVED DATE

CAD

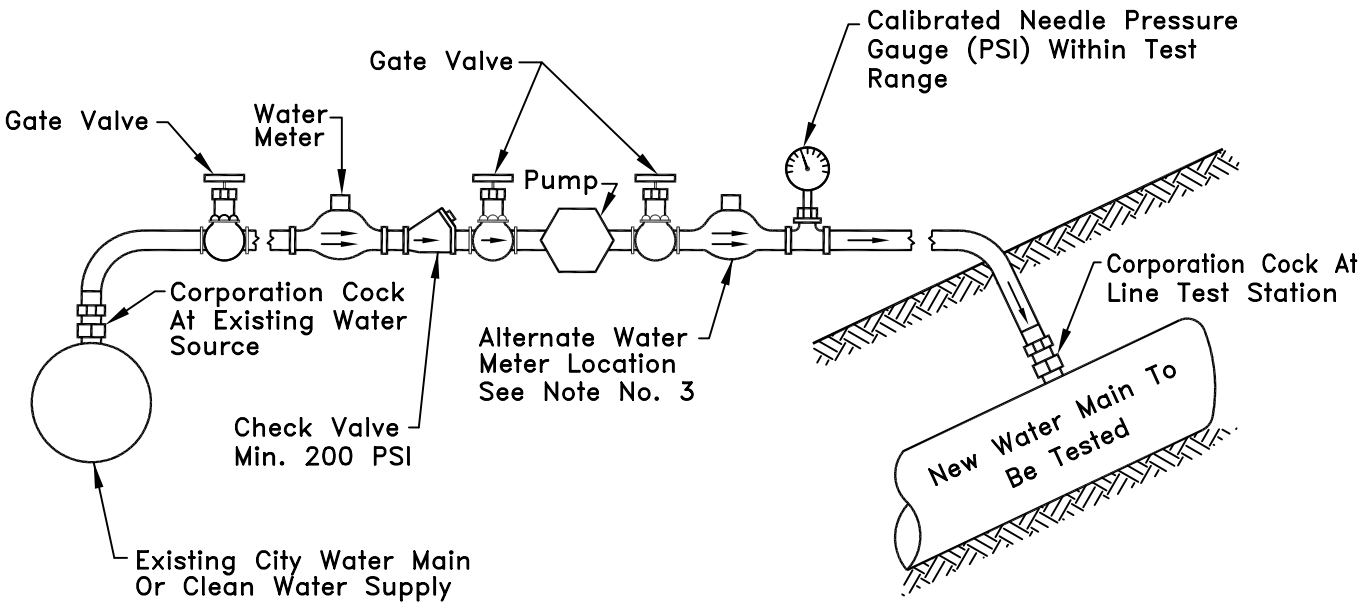

NOTES:

1. Water Meter And Pressure Gauge To Be Furnished By City Of Frederick.
2. All Lines, Fittings, And Test Appurtenances Shall Be Capable Of Withstanding Maximum Text Pressure.
3. When Test Pressure Is Less Than Pressure Range Of Meter, Install Meter At Alternate Location Shown.
4. Provide Adequate Protection To All Lines, Fittings And Test Appurtenances When Testing During Freezing Weather.
5. Pump Must Be Capable Of Pressure Within Test Range (Provide For Pressure Relief On Pump).
6. Provide Corporation Cock With Copper Connection At Locations As Directed For Chlorine And Bacteria Tests.

W–28	DRAWN BY: KAT SCALE: NONE	REVISIONS:		METHOD OF TESTING WATER MAINS	CITY OF FREDERICK Stan Aldridge 7–16–99 APPROVED DATE

CAD

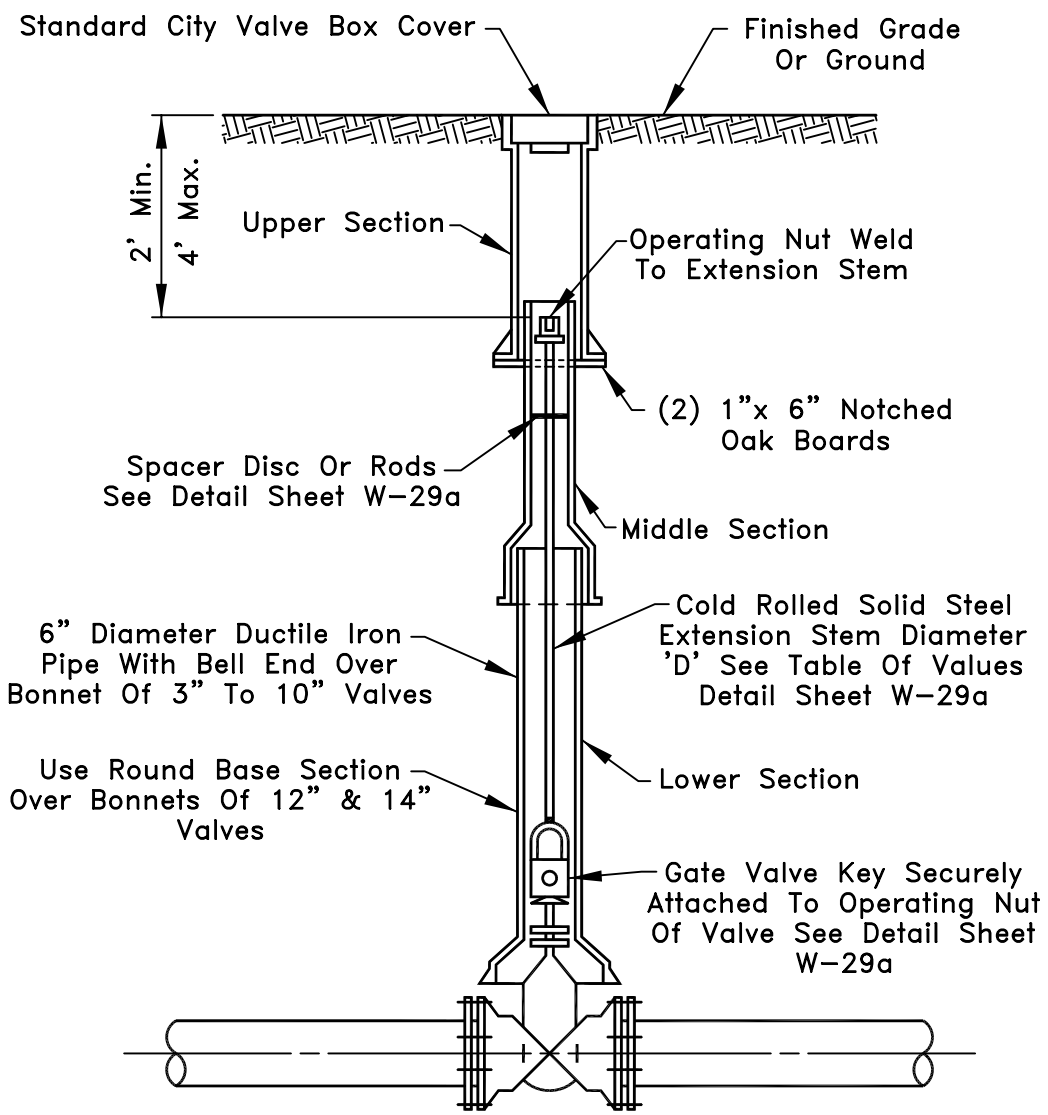

GATE VALVE

NOTES:

1. For Gate Valve Key And Spacer Disc Or Rods Details And Table Of Values See Detail Sheet W-29a.

2. For General Notes See Detail Sheet W-29b.

3. For Valve Extension Stem For City Valve Boxes See Detail Sheet W-29c.

CITY OF FREDERICK

APPROVED

7-16-99
DATE

EXTENSION STEM AND VALVE BOXES FOR DEEP VALVE SETTINGS

REVISIONS:

DRAWN BY: KAT

SCALE: NONE

W-29

CAD

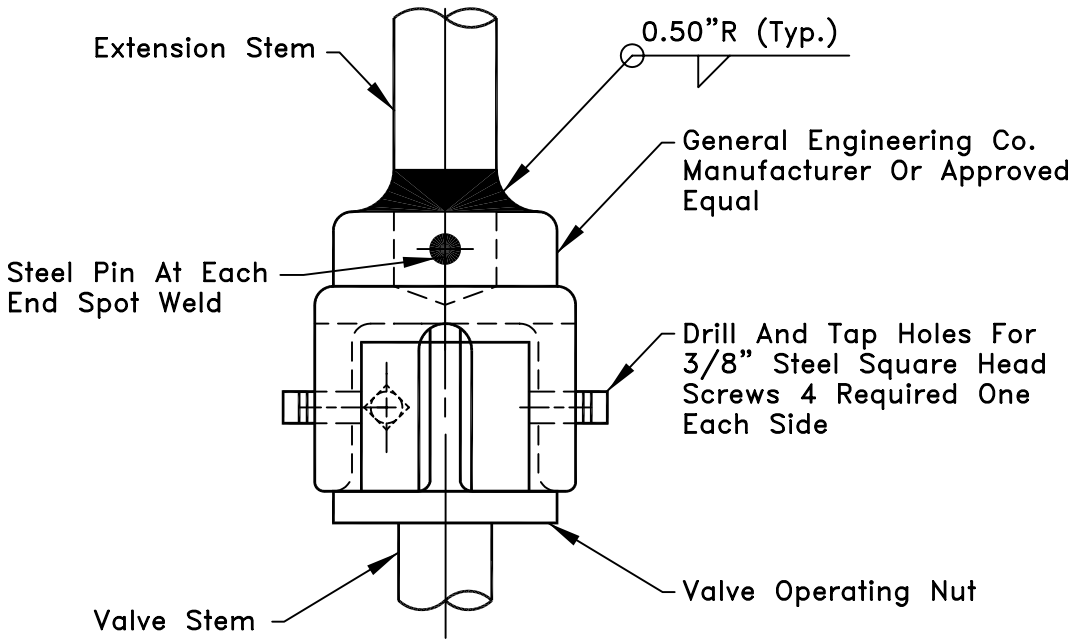

GATE VALVE KEY DETAIL

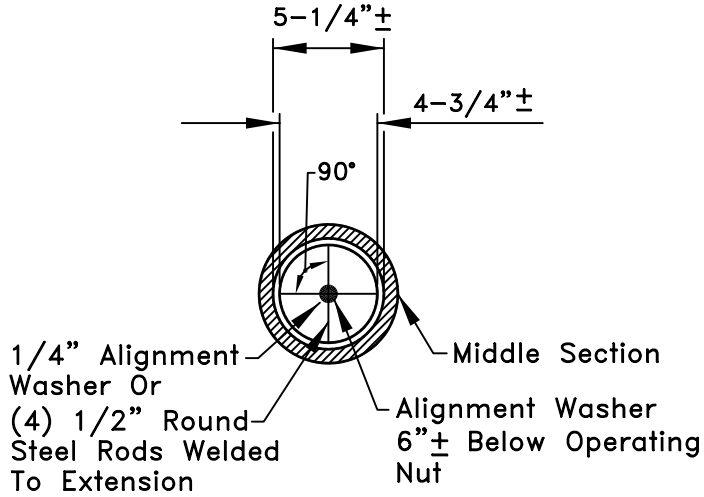

SPACER DISC OR RODS DETAIL

DIMENSIONS FOR VALVES AND EXTENSION STEMS

Valve Size	3"	4"	6"	8"	10"	12"	14"	16"	20"	24"	30"	36"	42"	48"
Extension Stem Diameter 'D'	7/8"	7/8"	1"	1-1/8"	1-1/4"	1-1/4"	1-3/8"	1-1/2"	1-3/4"	1-3/4"	1-3/4"	1-3/4"	2"	2"

W-29a	DRAWN BY: KAT SCALE: NONE	REVISIONS:	EXTENSION STEMS & VALVE BOXES FOR DEEP VALVE SETTINGS DETAILS & TABLE OF VALUES	CITY OF FREDERICK Stan Aldridge APPROVED 7-16-99 DATE

CAD

NOTES:

1. Extension Stem To Be Securely Welded To Gate Valve Key.

2. Length Of Stem To Be Such That Operating Nut Will Be Located As Prescribed On Detail W-29 And W-29c.

3. Weld Four (4) - 1/2" Round Steel Rods Or 1/4" Thick Steel Alignment Washer To Extension Stem To Insure Operating Nut Is Centrally Located Within Valve Box.

4. Paint All Exposed Steel Surfaces With 2-Coats Of Bituminous Paint.

5. Standard Detail W-29 'EXTENSION STEMS & VALVE BOXES FOR DEEP VALVE SETTINGS' Is To Be Used When Distance From Top Of Operating Nut Of Valve To Finished Grade Or Ground Exceeds 4'-0".

6. All Construction To Be Plumb.

7. General Engineering Co. Part No. 3339 Is A Base Number And Should Be Followed By A Letter Which Designates The Rod Outside Diameter.

BASE NUMBER	LETTER DESIGNATION	ROD OUTSIDE DIAMETER
3339	Plain Or A	7/8"
	B	1"
	C	1-1/8"
	D	1-1/4"
	E	1-3/8"
	F	1-1/2"
	G	1-3/4"
	H	2"

Parts From General Engineering Co. Or Approved Equal

CITY OF FREDERICK

APPROVED Stan Aldridge 7-16-99 DATE

EXTENSION STEMS AND VALVE BOXES FOR DEEP VALVE SETTINGS GENERAL NOTES

REVISIONS:

DRAWN BY: KAT
SCALE: NONE

W-29b

CAD

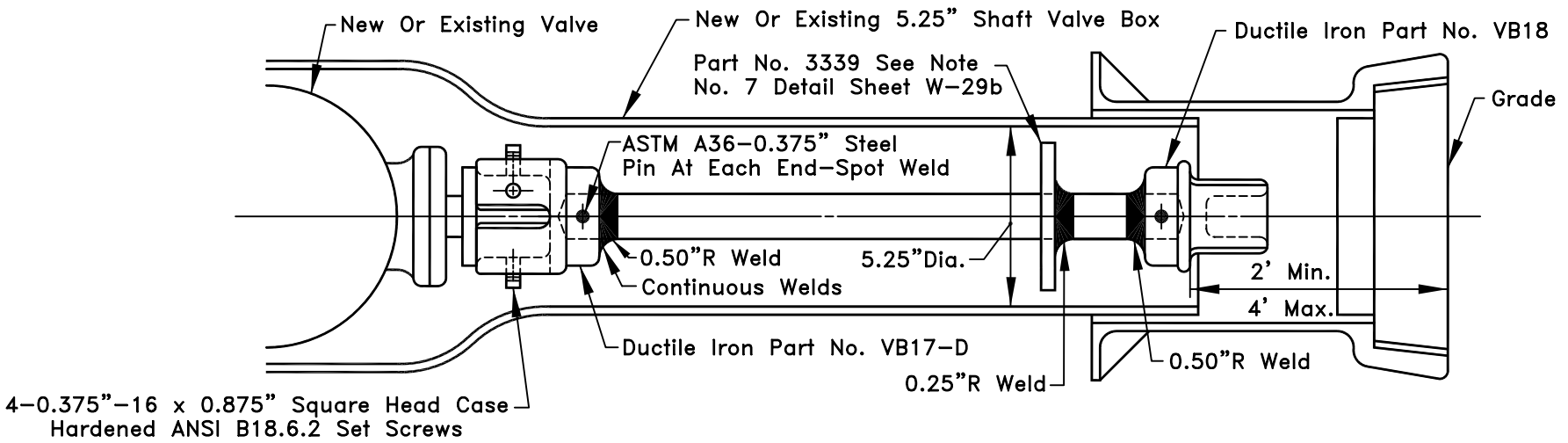

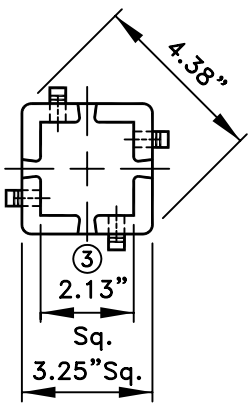

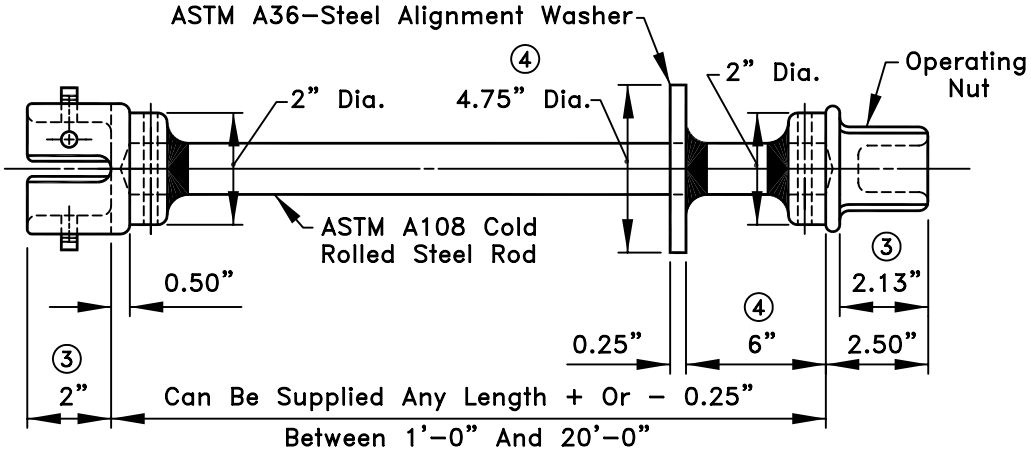

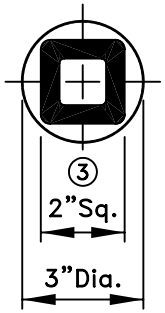

NOTES:

1. Ductile Parts Are Type 80-60-03. 80/100,000 PSI Tensile-ASTM A536.
2. Assembly To Receive 2-Coats Bituminous Base Black Paint.

(3) Tolerance + Or - .0625"

(4) Tolerance + Or - .125"

5. Part Numbers Are The General Engineering Co. Or Approved Equal.

W-29c	DRAWN BY: KAT SCALE: NONE	REVISIONS:	VALVE EXTENSION STEM FOR CITY VALVE BOXES	CITY OF FREDERICK Stan Aldridge APPROVED 7-16-99 DATE

CAD

WATER VALVE	Date:	Page:
Subdivision:		
Location:		
Prepared By:		

The Water Valve Tie Dimensions Shown Have Been Field Verified On (Date)_____ And The Information Hereon Is AS-BUILT.

_____ _____

Maryland Registered Land Surveyor Signature & Maryland Registration Number — Date

AS-BUILT

NOTES:

1. This Drawing Is A Full Size Representation Of The Standard Water Valve Tie Sheet.

△1 Revised Required Signature For Certification From Company Representative To Maryland Registered Surveyor

△2 Revised Printing Scale To Reflect Full Size Of Sheet

CITY OF FREDERICK

Stan Aldridge 7-16-99

APPROVED DATE

WATER VALVE TIE STANDARD SHEET BLANK

REVISIONS:

△1 KAT 8/01/01

△2 05/31/06

DRAWN BY: KAT

SCALE: NONE

W-30

CAD

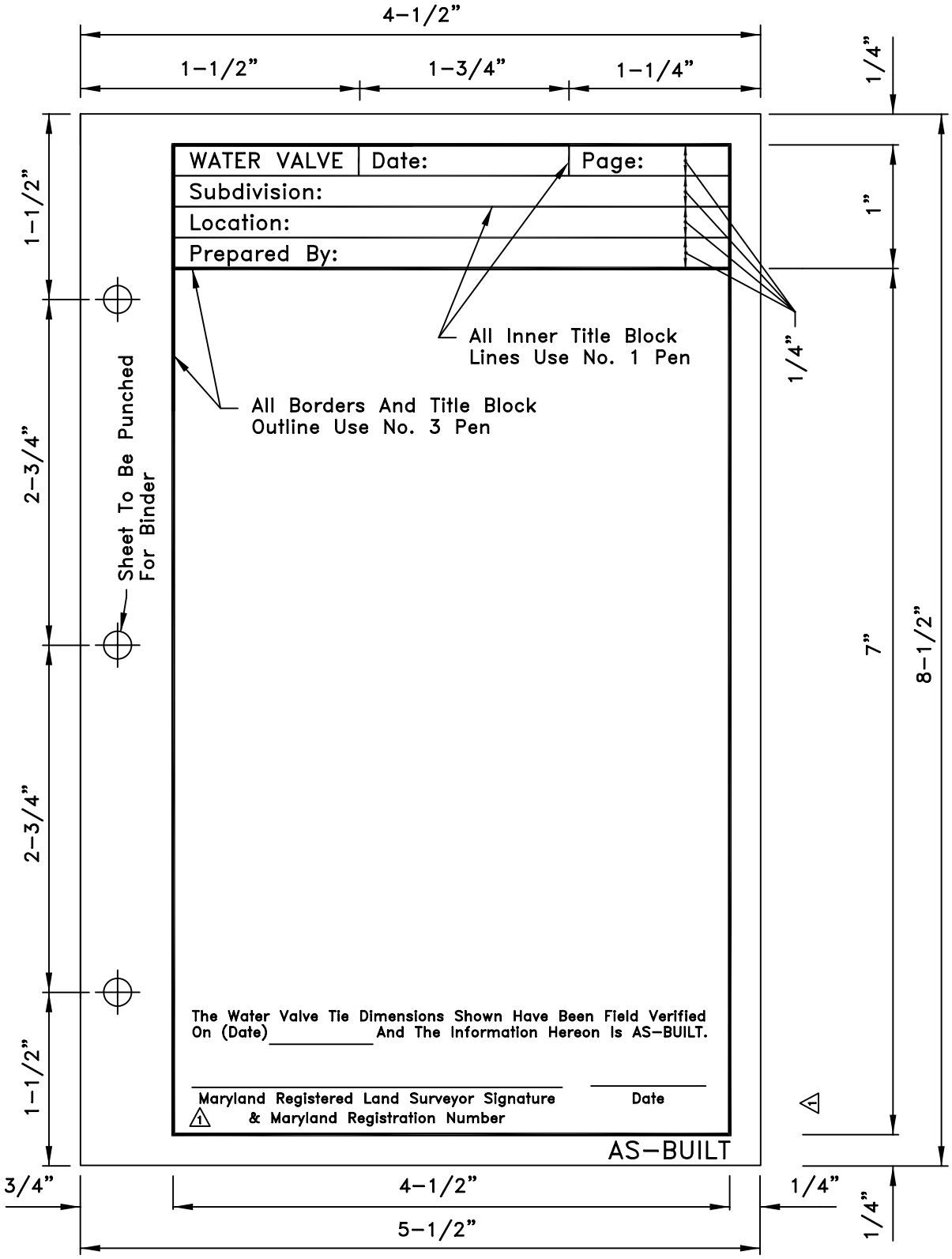

NOTES:

1. Title Block Lettering: WATER VALVE – All Upper Case Letters, Use 120 Lettering Template, No. 0 Pen. All Other Title Block Lettering Use Upper And Lower Case Letters, 120 Lettering Template, No. 0 Pen.

2. For Additional Notes See Detail W-30d.

3. AS-BUILT Label At Bottom Right Hand Corner Of Sheet – All Upper Case Letters. Use 140 Lettering Template, No. 1 Pen.

CITY OF FREDERICK
APPROVED
7-16-99
DATE

WATER VALVE TIE
STANDARD SHEET
SPECIFICATIONS

REVISIONS:
1 8/01/01

DRAWN BY: KAT
SCALE: NONE

W-30a

CAD

WATER VALVE	Date: 12-17-94	Page: 725
Subdivision:	Frederick Heights	
Location:	Intersection Hillcrest Dr. & Keswick Pl.	
Prepared By:	The City Of Frederick	

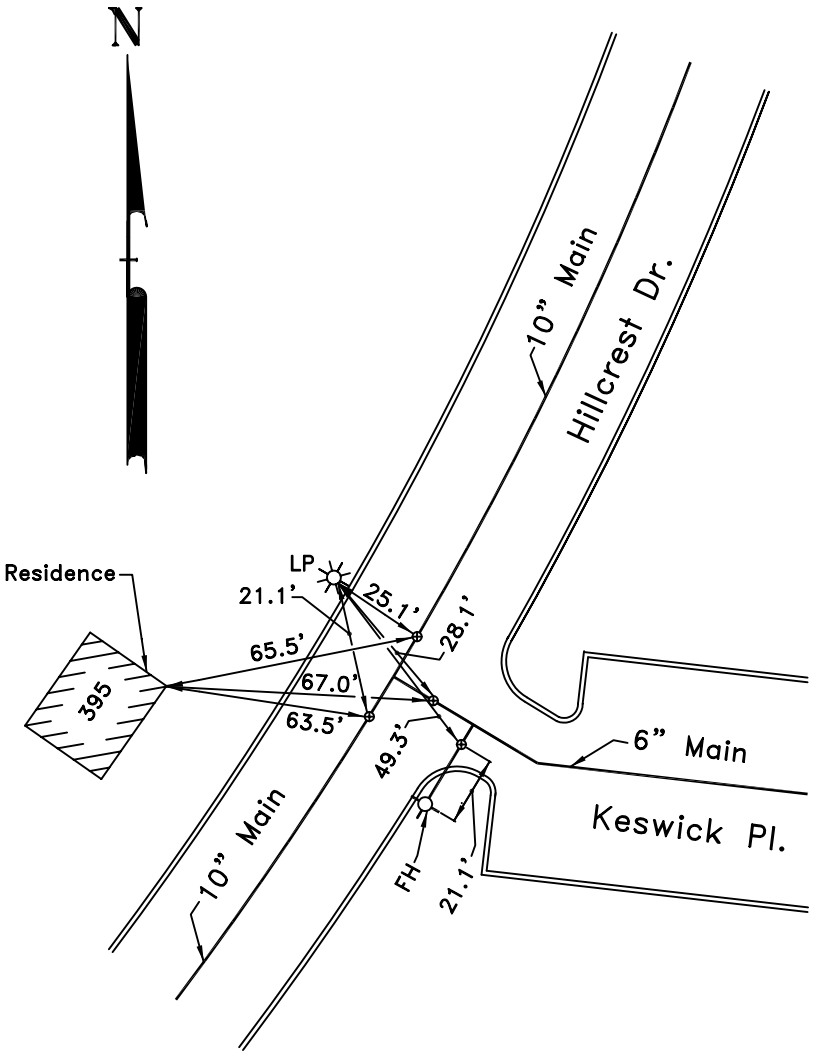

The Water Valve Tie Dimensions Shown Have Been Field Verified On (Date) 5-1-01 And The Information Hereon Is AS-BUILT.

1 John Doe MD. Reg. #00 — 5-4-01

Maryland Registered Land Surveyor Signature & Maryland Registration Number — Date

AS-BUILT

NOTES:

1. For Specific Symbols, Abbreviations, Lettering Template Sizes And Pen Sizes Required For The Preparation Of The Water Valve Drawings See Details W-30e Series.

2. For Additional Notes See Detail W-30d.

CITY OF FREDERICK
Stan Aldridge 7-16-99
APPROVED DATE

WATER VALVE TIE
STANDARD SHEET
SAMPLE DRAWING

REVISIONS:
1 WH 8/01/01

DRAWN BY: KAT
SCALE: NONE

W-30b

CAD

WATER VALVE	Date: 12–17–94 ①	Page: 725 ②
Subdivision:	Frederick Heights	③
Location:	Intersection Hillcrest Dr. & Keswick Pl.	④
Prepared By:	The City Of Frederick	⑤

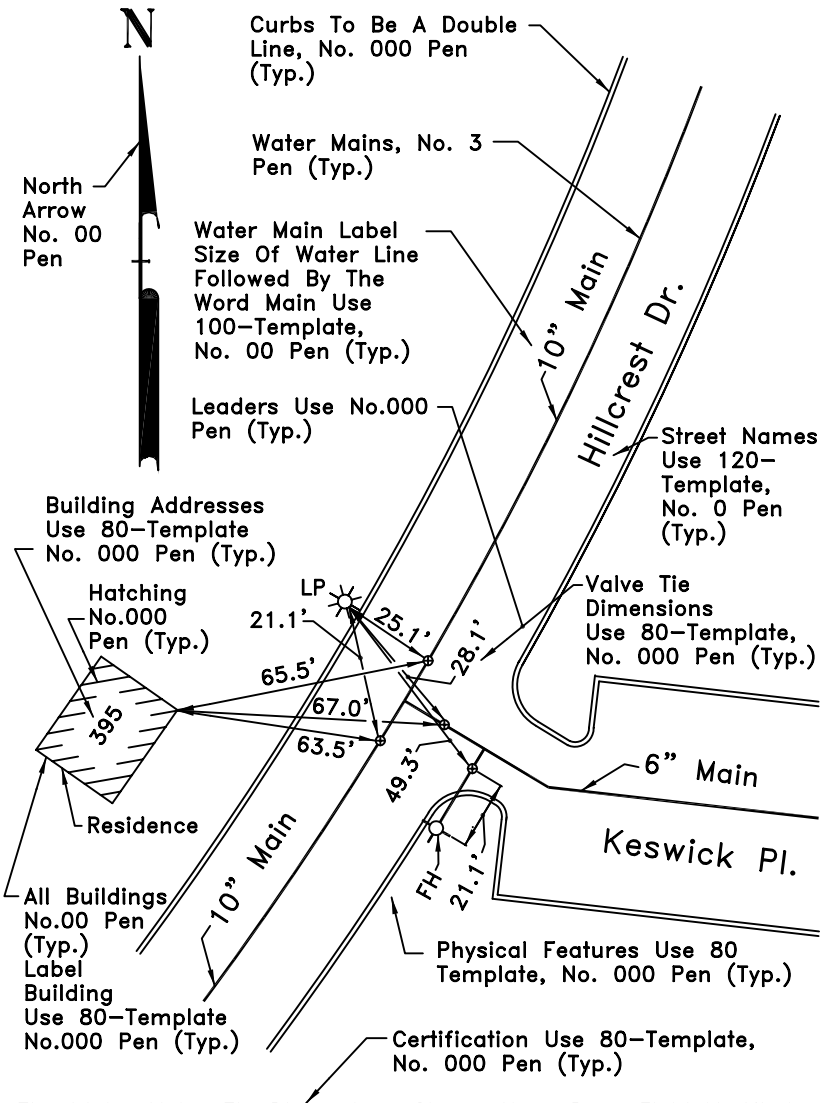

The Water Valve Tie Dimensions Shown Have Been Field Verified On (Date) 5–1–01 And The Information Hereon Is AS–BUILT.

△1 John Doe MD. Reg. #00 — 5–4–01

Maryland Registered Land Surveyor Signature & Maryland Registration Number — Date

AS–BUILT

NOTES:

① Date Drawing Was Prepared.

② Page Number Assigned By City Staff.

③ Name Of Subdivision. Include Section Number Where Applicable.

④ Identify Street Intersection Of Water Valve Site Shown. If Site Is Along A Street Where No Close Intersection Occurs Give Direction And Distance To Nearest Intersection.

⑤ Name Of Firm Preparing Drawing.

6. For Specific Symbols, Abbreviations, Lettering Template Sizes And Pen Sizes Required For The Preparation Of The Water Valve Tie Drawings See Details W–30e Series.

7. For Additional Notes See Detail W–30d.

CITY OF FREDERICK

Stan Aldridge 7–16–99

APPROVED DATE

WATER VALVE TIE
DRAFTING AND LETTERING
SPECIFICATIONS

REVISIONS:
△1 8/01/01

DRAWN BY: KAT
SCALE: NONE

W–30c

CAD

NOTES:

1. The 2-Copies Of Each Water Valve Tie Drawing Shall Be Submitted To The City On 5-1/2"x 8-1/2", Black Line, Double Matte Finish, 3 Mil Thick (Min.) Mylar Or Film Material.

2. Drafting Of The Water Valve Tie Drawings Must Conform To The Line Weights, Lettering Template Sizes, City Standard Drafting Symbols, City North Arrow And Sheet Format Called Out On Details W-30 Through W-30e Series.

3. The Pen And Lettering Template Sizes Stipulated In The Water Valve Tie Details Are Standard English System Sizes. Closest Metric Equivalent May Be Substituted. CAD Generated Drawings Are Preferable If They Meet The Standards Stipulated In Details W-30 Through W-30e. Freehand Drafted Valve Tie Drawings Are Not Acceptable Without Prior Approval Of The City Engineer.

4. Each Water Valve Tie Drawing Submitted Shall Be 3-Hole Punched As Shown Trimmed To 5-1/2" To 8-1/2".

5. Water Valve Tie Drawings Are To Be Prepared Using The Standard City Symbols And Abbreviations Shown On Details W-30e Series. The Symbols And Abbreviations Used Appear Most Often On City Drawings. It May Be Necessary To Indicate Features Which Are Not Covered By The City Details. Should This Situation Arise An Appropriate Symbol And/Or Abbreviation May Be Selected.

6. Water Valve Tie Drawings Are To Reflect Only As-Built Information. All Dimensions Are To Be Field Run. Dimensions Should Be Shown To The Nearest 0.1' (Tenth Of A Foot). Water Valve Tie Distances Exceding A Maximum Length Of 100.0' Are Not Acceptable Without Prior Approval Of The City Engineer.

7. Water Valve Tie Drawings Are Not Required To Be Drawn To Scale. However, It Is Required That They Reflect A Close Graphic Representation Of The Site.

8. Only One Water Valve Tie Site Is Permitted To Be Shown On Each Drawing. Multiple Sites, Even If Located Along The Same Road, Are Not Permitted To Be Shown On The Same Drawing.

9. The City Reserves The Right To Reject And Require The Redrafting Of Any Water Valve Tie Drawing Which:

   a. Does Not Comply With The Requirements Set Forth In The City Standard Details W-30 Through W-30e Series.

   b. Does Not Furnish Adequate Information To Identify The Valve Site.

   c. Is Not Drafted Neatly And Legibly On The Standard Water Valve Tie Sheet Format.

   d. Has Been Spot Checked In The Field And Found To Be Inaccurate In Site Representation, Has Inaccurate Water Valve Tie Measurements And/Or Does Not Reflect As-Built Conditions.

CITY OF FREDERICK

APPROVED 7-16-99 DATE

WATER VALVE TIE
STANDARD SHEET
GENERAL NOTES

REVISIONS:
1 8/01/01

DRAWN BY: KAT
SCALE: NONE

W-30d

CAD

NOTES:

△1 9. e. Does Not Have The Field Verification Certificate Completed With The Date Of The Water Valve Tie Field Verified Measurements And Does Not Have The Certification Signed And Dated By A Maryland Registered Land Surveyor Including The Surveyor's Registration Number.
(Continued)

f. Does Not Show All Required Valve Tie Measurements (Minimum Of 2 To Each Valve) Shown In Feet To The Nearest Tenth Of A Foot.

g. Has Measurements Which Exceed The Maximum Allowable Distance Of 100.0' Without Prior Approval Of The City Engineer.

h. Does Not Show All Valves Which Will Be Maintained By The City.

i. Does Not Tie Water Valves To Acceptable Permanent Structures (Non-Permanent Structures May Be Used Only With Prior Approval Of The City Engineer).

j. Does Not Have All Title Block Information Completed With The Exception Of The Page Number Which Will Be Assigned By The City Engineering Staff.

k. Does Not Have All Features Properly Labeled.

l. Does Not Have A North Arrow.

△1 10. Each Water Valve Tie Drawing Shall Include The Following Information:

a. Completed Title Block Information Except For Page Number Which Will Be Assigned By The City Engineering Staff (See Detail W-30c).

b. City North Arrow.

c. Graphically Correct Street And Location Layout Of The Water Valve Site. Streets To Be Labeled And Edge Of Street Shown (If Curb Exists Show Curb Line).

d. Structures, Utilities And All Other Physical Features Shown On The Water Valve Tie Drawings Should Be Identified By Name, Abbreviation, Address And/Or Symbol.

e. Water Valves And Water Lines Should Be Boldly Shown. Label Water Lines With Size In Inches Followed By The Word Main. Water Valves Are The Only Structures Which May Be Identified On The Drawing By Symbol Without A Label.

f. Leaders Clearly Marking The Dimensions Between The Valves And The Structures They Are Tied To.

g. A Minimum Of 2 Dimensions Designated In Feet To The Nearest Tenth Of A Foot From Each Water Valve To 2 Different Acceptable Permanent Structures. When A Building Is Used To Tie Down The Location Of A Water Valve, Dimensions May Be Taken From Different Corners Of The Same Building (This Will Satisfy The 2 Dimension Requirement For That Water Valve). Where A Fire Hydrant Exists, One Of The 2 Valve Tie Dimensions Is Required To Be From The Hydrant To The Water Valve On The Hydrant Line. Water Valves Are Required To Be Tied By Dimension To The Nearest Acceptable Permanent Structure (Manhole Cover, Inlet, Street Light Pole, Fire Hydrant, Corner Of A Permanent Building, Etc.). An Acceptable Permanent Structure Is One Which Is Not Expected To Change In Condition Or Location. Water Valves Shall Not Be Tied To Unacceptable Or Non-Permanent Structures (Trees, Fence Posts, Porches, Steps, Sheds, Etc.). A Non-Permanent Structure Is One Whose Condition And Location Is Affected More Readily By Severe Weather Conditions, Home Repairs, Renovations, Accidents, Etc. If A Situation Arises Where There Are No Acceptable Permanent Structures Available Then Non-Permanent Structures May Be Used Only With The Prior Approval Of City Engineer.

CITY OF FREDERICK
Stan Aldridge 7-16-99
APPROVED DATE

WATER VALVE TIE
STANDARD SHEET
GENERAL NOTES

REVISIONS:
△1 WHK 8/01/01

DRAWN BY: KAT
SCALE: NONE

W-30d
Continued

CAD

NOTES:

△1 10. h. (Continued) A Certification That The Water Valve Tie Dimensions Have Been Field Verified And That The Information Which Appears On The Drawing Is As-Built. The Date That The Information Was Field Verified Must Appear In The Cerification. The Cerification Must Be Signed By A Maryland Registered Land Surveyor And Include The Surveyor's Registration Number. The Date The Drawing Was Signed Should Also Appear In The Certification. See Detail W-30c For Sample.

i. The "AS-BUILT" Label Shall Be Located At The Bottom Right Hand Corner Of Each Water Valve Tie Sheet.

CITY OF FREDERICK

APPROVED 7-16-99 DATE

WATER VALVE TIE
STANDARD SHEET
GENERAL NOTES

REVISIONS:
△1 8/01/01

DRAWN BY: KAT
SCALE: NONE

W-30d
Continued

CAD

PEN SIZE	LINE WEIGHT	LETTERING TEMPLATE SIZE
000		80–Template
00		100–Template
0		120–Template
1		140–Template
2		175–Template
3		200–Template 240–Template

NOTES:

1. When Using Details W–30e Continued Sheets 2 And 3 Of 5 'WATER VALVE TIE STANDARD DRAFTING SYMBOLS' Most Of The Symbols Shown Are To Be Drafted Using A No. 00 Pen And Labeled Using An 80–Lettering Template Using A No. 000 Pen Unless Otherwise Called Out In The Block Labeled 'Size/Type Of Symbol (No. 00 Pen) Lettering Size (80–Lettering Template) Except Where Noted'. When The Block Has A Pen Size Shown, Use The Pen Size Called For To Draft The Symbol. If A Pen Size Is Not Shown Then The Symbol Should Be Drafted Using A No. 00 Pen. If The Block Shows A Lettering Template Size Followed By A Pen Size, Use Them To Label The Symbol. If A Lettering Template And Pen Size Are Not Called Out Then The Symbol Should Be Labeled Using A Size 80–Template With A No. 000 Pen.

2. Creeks And Roads Should Be Identified By Proper Name Whenever Possible. Street Names Should Be Labeled With A Size 120–Lettering Template And A No. 0 Pen. Creek, River, Stream, Etc. Names Should Be Labeled Using A Size 120–Lettering Template (Slant Lettering With A Size 0 Pen. In Cases Where The Roadway Or Creek Is Un–Named They Should Be Identified By A General Label (Street, Road, Drive, Creek, Stream, River, Etc.) Using A Size 80–Lettering Template And A No. 000 Pen.

3. The First Letter Of Each Word Or Abbreviation Which Appears On The Drawing Should Be Capitalized.

CITY OF FREDERICK

APPROVED Stan Aldridge 7-16-99 DATE

WATER VALVE TIE STANDARD
PEN AND LETTERING SIZES

REVISIONS:

DRAWN BY: KAT
SCALE: NONE

W–30e

CAD

Symbol And/Or Label	Description	Size/Type Of Symbol (No. 00 Pen) Lettering Size (80–Lettering Template) Except Where Noted
○ DW ○ W MH	Dewatering Device Water Manhole	1/8" Circle No. 0 Pen
○ SS MH ○ SD MH ○ E MH ○ T MH	Sanitary Manhole Storm Manhole Electrical Manhole Telephone Manhole	1/8" Circle
⊗ GV	Gas Valve	3/32" Circle
⊗ WV ○ WM	Water Valve Water Meter	3/32" Circle No. 0 Pen
LP ○ TP PE #F0101 And/Or C&P #01	Light Pole Traffic Signal Pole Utility Pole (Designate Utility & Show Pole Numbers Where Applicable)	7/64" Circle
○ CO ○ FP ○ SP	Cleanout Fence Post Sign Post	5/64" Circle
◀ R	Reducer	7/64" Solid Triangle
SD Inlet	Storm Drain Inlet	3/32" Square

Symbol And/Or Label	Description	Size/Type Of Symbol (No. 00 Pen) Lettering Size (80–Lettering Template) Except Where Noted
Vault	Vault (Designate Type: Water, Etc.)	Variable Size Rectangle
Residence 643	Building (Designate Type: Business, Residence, Etc. Show Address If Applicable	Variable Size Rectangle, No.00 Pen Hatching, No.000 Pen
Conc. Easement	Utility Line In Concrete Encasement	
T	Telephone Line	
E	Electric Line	
G	Gas Line	
SD	Storm Drain	
SS	Sanitary Sewer	
10" Main	Water Line (Designate Size)	No. 3 Pen 100–Template, No. 00 Pen
Cap Off Or Plug	Water Line Cap Off Or Plug	No. 3 Pen
℄ Esmt.	Center Line Easement Line (Designate Type)	No. 000 Pen

W–30e Continued	DRAWN BY: KAT SCALE: NONE	REVISIONS:	WATER VALVE TIE STANDARD DRAFTING SYMBOLS	CITY OF FREDERICK Stan Aldridge 7–16–99 APPROVED DATE

CAD

Symbol And/Or Label	Description	Size/Type Of Symbol (No. 00 Pen) Lettering Size (80–Lettering Template) Except Where Noted
PL R/W	Property Line Road Right–Of–Way	No. 0 Pen
Street Name	Street (no Curb)	120–Template No. 0 Pen
Street Name	Street (With Curb)	No. 000 Pen 120–Template, No. 0 Pen
Bridge Name Street Name Road Creek Creek	Bridge (Designate Street And Creek Names	Street Name 120–Template, No. 0 Pen *Creek Name* *120–Template* *(Slant),* *No. 0 Pen*
Creek Name Or Creek *Creek Name* Creek	Creek Or Stream (Designate By Name)	*Creek Or Stream* *120–Template* *(Slant),* *No. 0 Pen*
Dimension Label Dimension	Label And Dimensions Leaders	No. 000 Pen

Symbol And/Or Label	Description	Size/Type Of Symbol (No. 00 Pen) Lettering Size (80–Lettering Template) Except Where Noted
FL x x Stone FL RR Conc. Wall Shrub Tree	Fence Line (Designate Type: Chainlink, Wire, Etc.) Stone Fence Line Railroad Tracks Concrete Walls Shrub Tree (Designate Size And Type)	
N	North Arrow	The North Arrow 'N' Was Not Drafted With A Lettering Template It Is A Custom Designed

W–30e Continued	DRAWN BY: KAT SCALE: NONE	REVISIONS:		WATER VALVE TIE STANDARD DRAFTING SYMBOLS	CITY OF FREDERICK Stan Aldridge 7–16–99 APPROVED DATE

CAD

ABBREVIATION	DESCRIPTION	ABBREVIATION	DESCRIPTION	ABBREVIATION	DESCRIPTION
CIP	Cast Iron Pipe	FH	Fire Hydrant	PL	Property Line
CL	Center Line	FL	Fence Line	PVC	Polyvinyl Chloride
CO	Cleanout	FP	Fence Post	R	Reducer
Conc	Concrete	G	Gas	RCP	Reinforced Concrete Pipe
Dia	Diameter	GM	Gas Meter	RR	Railroad
DIP	Ductile Iron Pipe	GV	Gas Valve	R/W	Right-Of-Way
DW	Dewatering Device	IP	Iron Pipe	SD	Storm Drain
E	Electric Or Electrical	LP	Light Pole	SP	Sign Post
Esm't	Easement	Max	Maximum	SS	Sanitary Sewer
Ex	Existing	MH	Manhole	T	Telephone
Fd	Found	Min	Minimum	TP	Traffic Signal Pole

W-30e Continued	DRAWN BY: KAT SCALE: NONE	REVISIONS:		WATER VALVE TIE STANDARD ABBREVIATIONS	CITY OF FREDERICK Stan Aldridge 7-16-99 APPROVED DATE

CAD

ABBREVIATION	DESCRIPTION	ABBREVIATION	DESCRIPTION	ABBREVIATION	DESCRIPTION
Typ	Typical				
W	Water				
W/	With				
WM	Water Meter				
WV	Water Valve				

W-30e
Continued

DRAWN BY: KAT
SCALE: NONE

REVISIONS:

WATER VALVE TIE
STANDARD ABBREVIATIONS

CITY OF FREDERICK

Stan Aldridge
APPROVED

7-16-99
DATE

CAD

1 (A) Double Check #1024-S

(B) Approved Full Port Valve Maybe Ball Valve With Bleed)

(C) Pressure Reducer Valve

1 (D) Double Check On Domestic #1024

1 (E) 1" Or 3/4" Yoke

1 (F) 1-1/2" And Larger Will Take A Flange Type Meter

(G) Full Way Opening Valves With Bleed (No Stop And Waste). Must Be Indicating Type Handle

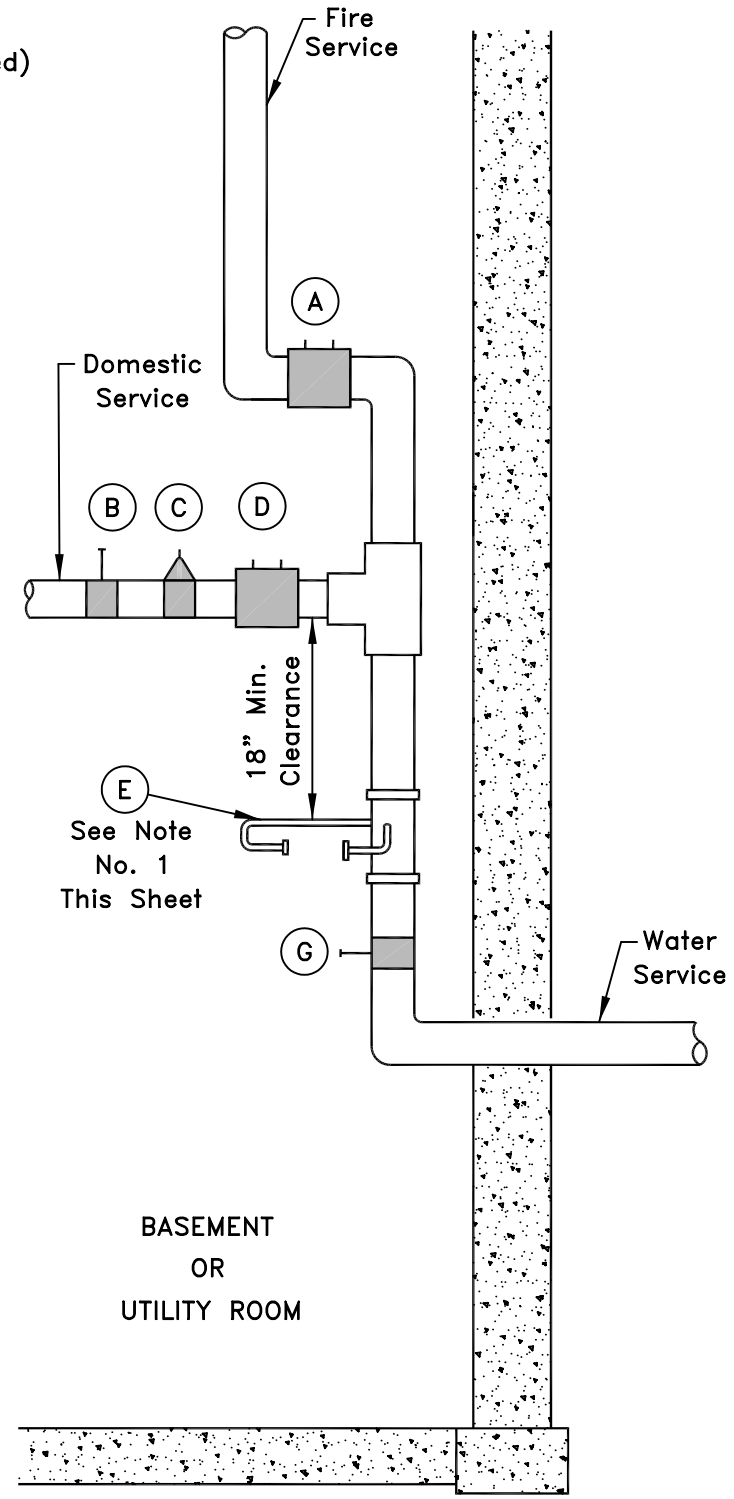

NOTES:

1. The City Furnishes Yokes And 3/4" And 1" Meters. 1-1/2" And 2" Lines Will Have A Flange Type Meter Which The City Will Furnish.
2. Meter System Shall Not Be Installed Under Stairs Or Landings.

CITY OF FREDERICK

APPROVED 05-31-06 DATE

METER SETTINGS
RESIDENTIAL WATER SERVICE
AND FIRE LINE SPRINKLERS

REVISIONS:

DRAWN BY: KAT
SCALE: NONE

W-9c

CAD