SD-1	HEAVY DUTY STORM DRAIN MANHOLE FRAME AND COVER
SD-2	STANDARD FIELD CONNECTION
SD-3	TRENCHES - CRADLE AND ENCASEMENT
SD-4	DELETED
SD-5	DELETED
SD-5a	DELETED
SD-5b	DELETED
SD-5c	DELETED
SD-6	TYPE "A-1" MANHOLE (FOR NORMAL DEPTHS)
SD-6a	TYPE "A-1" MANHOLE (FOR NORMAL DEPTHS) - GENERAL NOTES
SD-7	TYPE "B" MANHOLE (SHALLOW)
SD-8	TYPE "C" MANHOLE 42" AND LARGER PIPES
SD-9	PRECAST SHALLOW MANHOLE
SD-10	PRECAST MANHOLE 48" DIAMETER
SD-10a	PRECAST CONCRETE MANHOLE 48" DIAMETER - GENERAL NOTES

SD-11	PRECAST CONCRETE MANHOLE 72" DIAMETER
SD-12	MANHOLE STEP FOR PRECAST MANHOLES
SD-13	FLEXIBLE "O" RING GASKET JOINT FOR PRECAST MANHOLES
SD-14	FLEXIBLE PVC ADAPTER INSTALLATION
SD-14a	PVC MANHOLE ADAPTER DETAIL FOR CONNECTIONS TO EXISTING MANHOLES
SD-15	PRECAST CONCRETE MANHOLE BUILT OVER EXISTING SEWER
SD-15a	PRECAST CONCRETE MANHOLE BUILT OVER EXISTING SEWER GENERAL NOTES
SD-16	PRECAST CONCRETE MANHOLE BUILT ON EXISTING PVC PIPE
SD-16a	PRECAST CONCRETE MANHOLE BUILT ON EXISTING PVC PIPE GENERAL NOTES
SD-17	SPECIAL SIDEWALK INLET
SD-17a	REVERSIBLE FRAME AND GRATE SPECIAL SIDEWALK INLET
SD-18	GROUTED RIP-RAP CHANNEL
SD-19	DELETED
SD-20	COS/COG INLET - PLANS
SD-20a	COS/COG INLET - SECTIONS

SD-20b	COS\COG INLET - GENERAL NOTES
SD-21	DELETED
SD-21a	DELETED

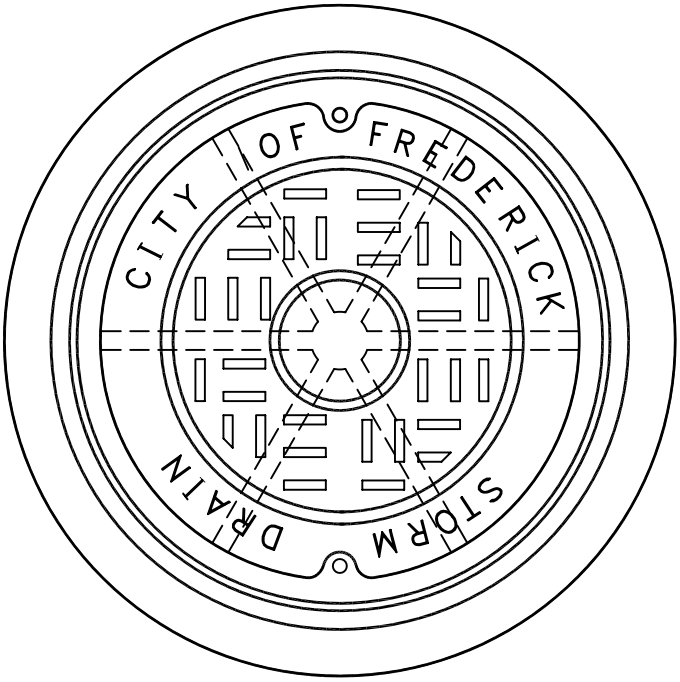

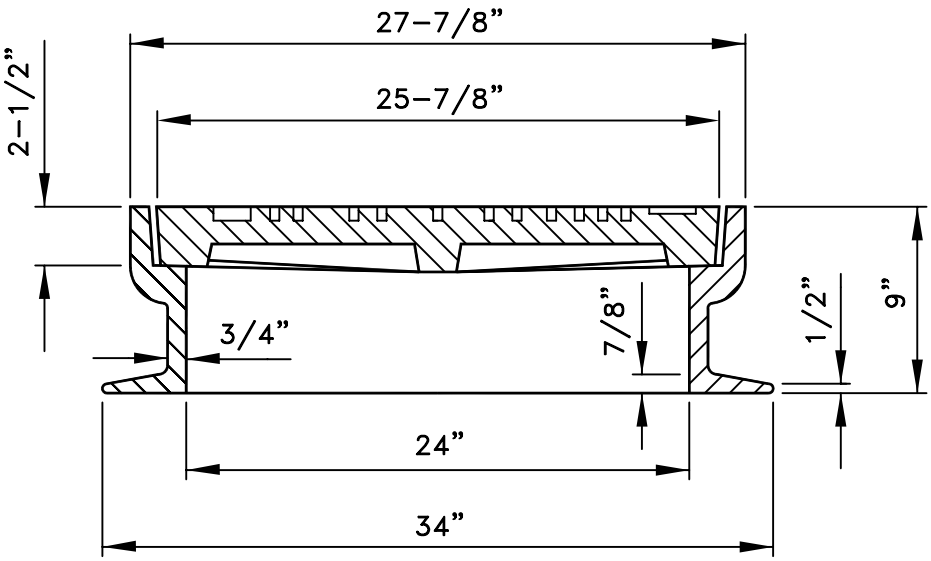

NOTES:

1. Material To Be Cast Iron ASTM A-48 Class 30.
2. Heavy Duty Manhole Frame And Cover Designed For H-20 Loading: Frame - (9") 250 Lbs.
   Cover - 170 Lbs.
3. Frame To Be Furnished With (4) 1" ϕ Flange Holes Located 90 Degrees Apart On A 30-1/4" Bolt Circle.
4. Manufactured By B & C Utility Supply, Inc., Finksburg, Maryland Or Approved Equal.
5. Manholes Within Flood Prone Areas Shall Be Water Tight.

CITY OF FREDERICK

Stan Aldridge 7-16-99

APPROVED DATE

HEAVY DUTY
STORM DRAIN MANHOLE
FRAME AND COVER

REVISIONS:

DRAWN BY: KAT

SCALE: NONE

SD-1

CAD

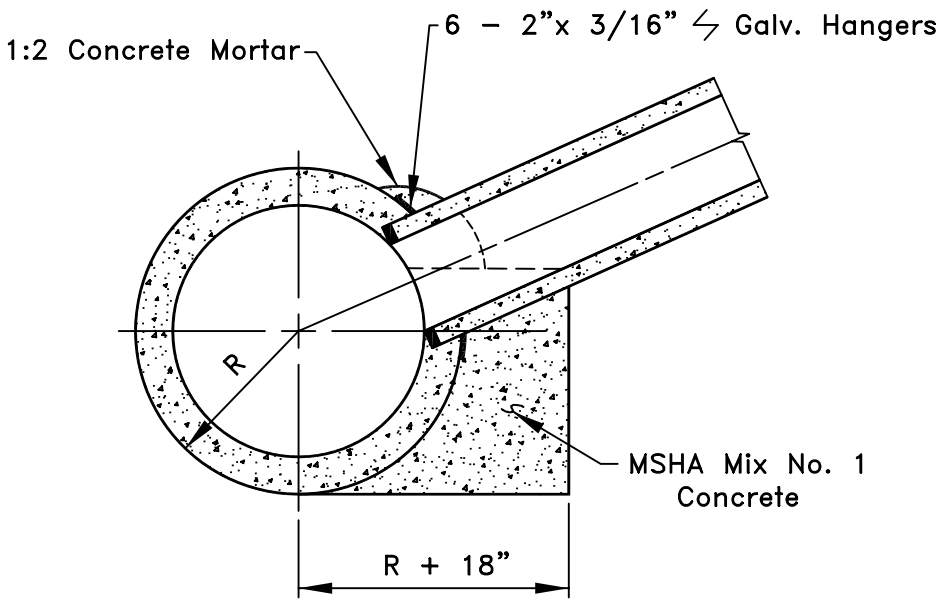

Trim End Of Smaller Pipe Flush
With Inside Of Larger Pipe.

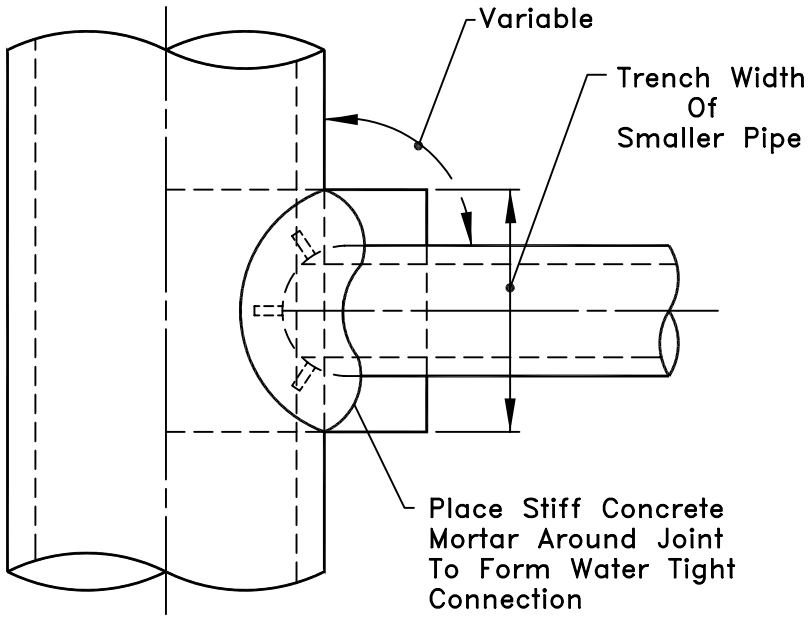

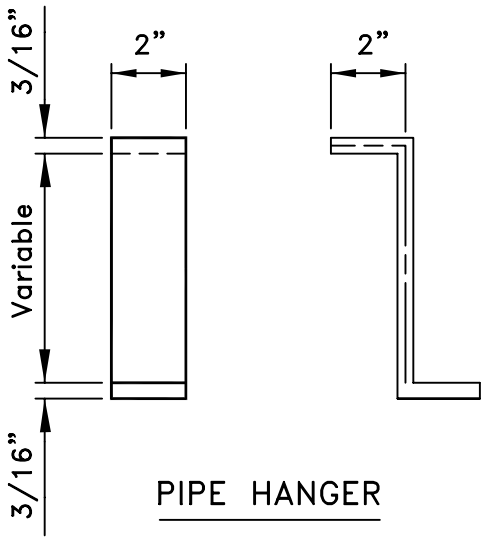

PIPE HANGER

SD–2	DRAWN BY: KAT SCALE: NONE	REVISIONS:		STANDARD FIELD CONNECTION	CITY OF FREDERICK Stan Aldridge 7–16–99 APPROVED DATE

CAD

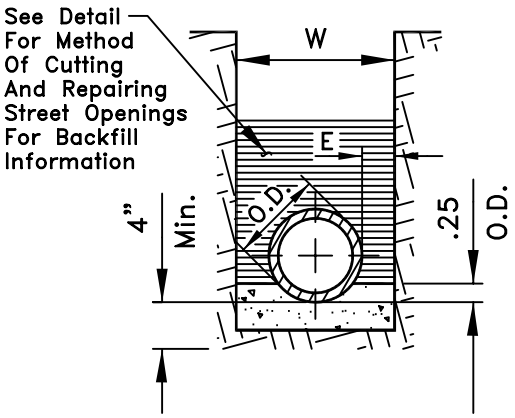

CONCRETE LOW CRADLE

LOW CRADLE						
Pipe Dia.	Max. Payment Cu. Ft. Per Lin. Ft.					
	VCPX	CSPX	RCSP	RCCP	RCCPX	ACSP
6"	0.97	0.97				0.92
8"	1.13	1.13				1.06
10"	1.30	1.30				1.23
12"	1.49	1.49	1.62	1.62	1.62	1.39
15"	1.79	1.79	1.87	1.91	1.91	
18"	2.10	2.10	2.20	2.22	2.22	1.92
21"	2.41		2.51	2.51	2.51	
24"	2.77		2.85	2.85	2.85	2.49
27"	3.52			3.72	3.72	
30"	4.06			4.12	4.12	3.61
33"	4.30			4.55	4.55	
36"	4.85			4.98	4.98	4.30
42"				6.59	6.59	
48"				7.67	7.67	
54"				8.75	8.75	
60"				9.97	9.97	

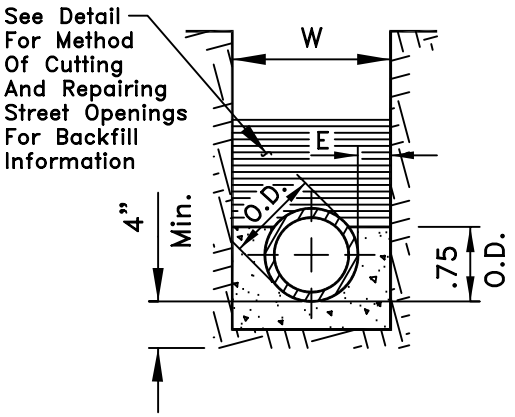

CONCRETE HIGH CRADLE

HIGH CRADLE						
Pipe Dia.	Max. Payment Cu. Ft. Per Lin. Ft.					
	VCPX	CSPX	RCSP	RCCP	RCCPX	ACSP
6"	1.44	1.44				1.35
8"	1.75	1.75				1.62
10"	2.08	2.08				1.95
12"	2.42	2.42	2.65	2.65		2.24
15"	2.98	2.98	3.18	3.18		
18"	3.53	3.53	3.73	3.73		3.23
21"	4.13		4.30	4.30		
24"	4.72		4.88	4.88	4.88	4.23
27"	6.30			6.71	6.71	
30"	7.23			7.45	7.45	6.49
33"	7.71			8.20	8.20	
36"	8.76			8.98	8.98	7.83
42"				12.35	12.35	
48"				14.26	14.26	
54"				16.26	16.26	

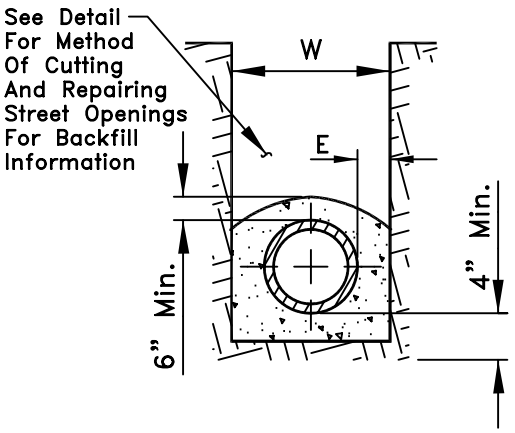

CONCRETE ENCASEMENT

CONCRETE ENCASEMENT						
Pipe Dia.	Max. Payment Cu. Ft. Per Lin. Ft.					
	VCPX	CSPX	RCSP	RCCP	RCCPX	ACSP
6"	2.24	2.24				2.13
8"	2.71	2.71				2.55
10"	3.17	3.17				2.99
12"	3.68	3.68	4.03	4.03		3.44
15"	4.48	4.48	4.83	4.83		
18"	5.36	5.36	5.66	5.66		4.90
21"	6.27		6.52	6.53		
24"	7.16		7.42	7.42	7.42	6.43
27"	9.43			10.05	10.05	
30"	10.85			11.17	11.17	9.73
33"	11.67			12.33	12.33	
36"	13.18			13.53	13.53	11.77
42"				18.44	18.44	
48"				21.38	21.38	
54"				24.46	24.46	

W = Max. Payment Width = O.D. + 2E(In.)

E = 9" For 6" To 24" Pipe

E = 12" For 27" To 36" Pipe

E = 15" For 42" To 72" Pipe

CITY OF FREDERICK

Stan Aldridge 7-16-99

APPROVED DATE

TRENCHES

CRADLE AND ENCASEMENT

REVISIONS:

DRAWN BY: KAT

SCALE: NONE

SD-3

CAD

OPEN

SD-04	DRAWN BY: SCALE: NONE	REVISIONS:			CITY OF FREDERICK APPROVED DATE

CAD

OPEN

SD-05	DRAWN BY: SCALE: NONE	REVISIONS:			CITY OF FREDERICK APPROVED DATE

CAD

OPEN

SD-5a	DRAWN BY: SCALE: NONE	REVISIONS:			CITY OF FREDERICK APPROVED DATE

CAD

OPEN

SD-5b	DRAWN BY: SCALE: NONE	REVISIONS:			CITY OF FREDERICK APPROVED DATE

CAD

OPEN

SD-5c	DRAWN BY: SCALE: NONE	REVISIONS:			CITY OF FREDERICK APPROVED DATE

CAD

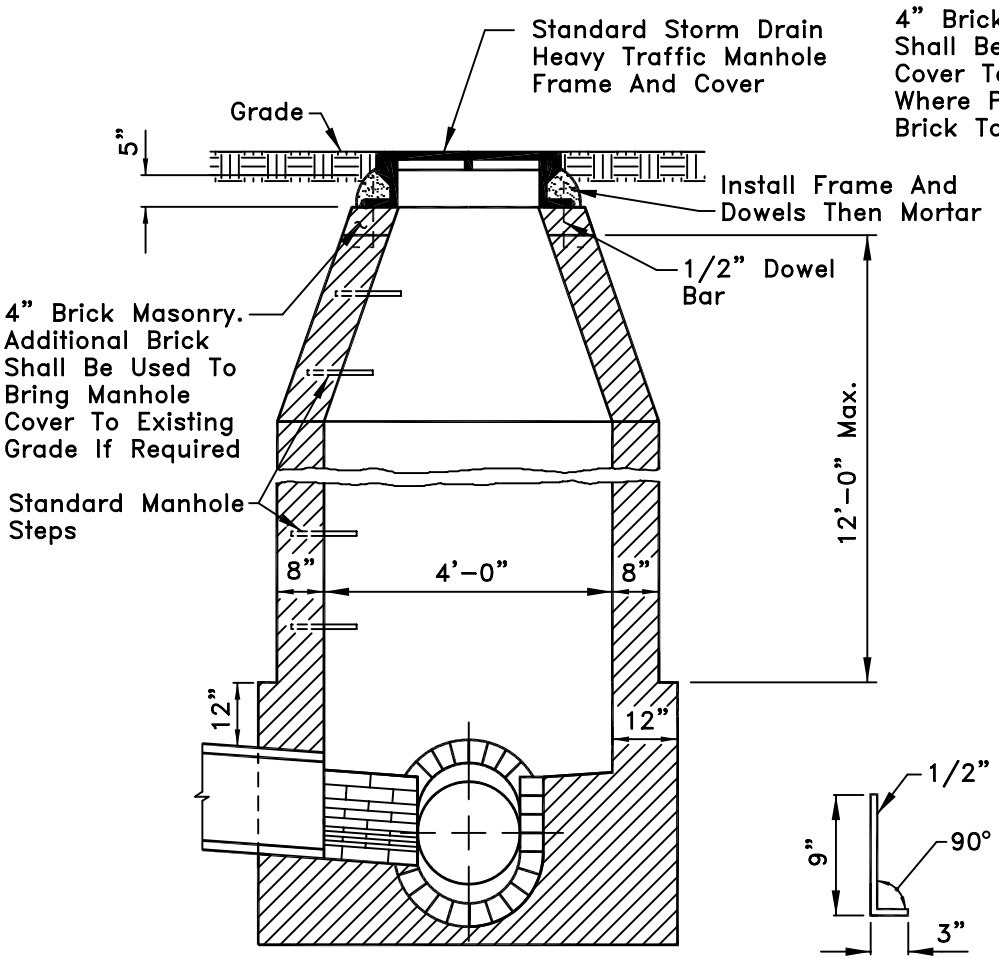

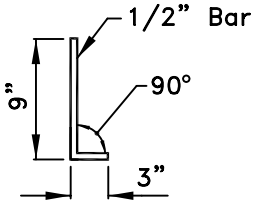

DOWEL

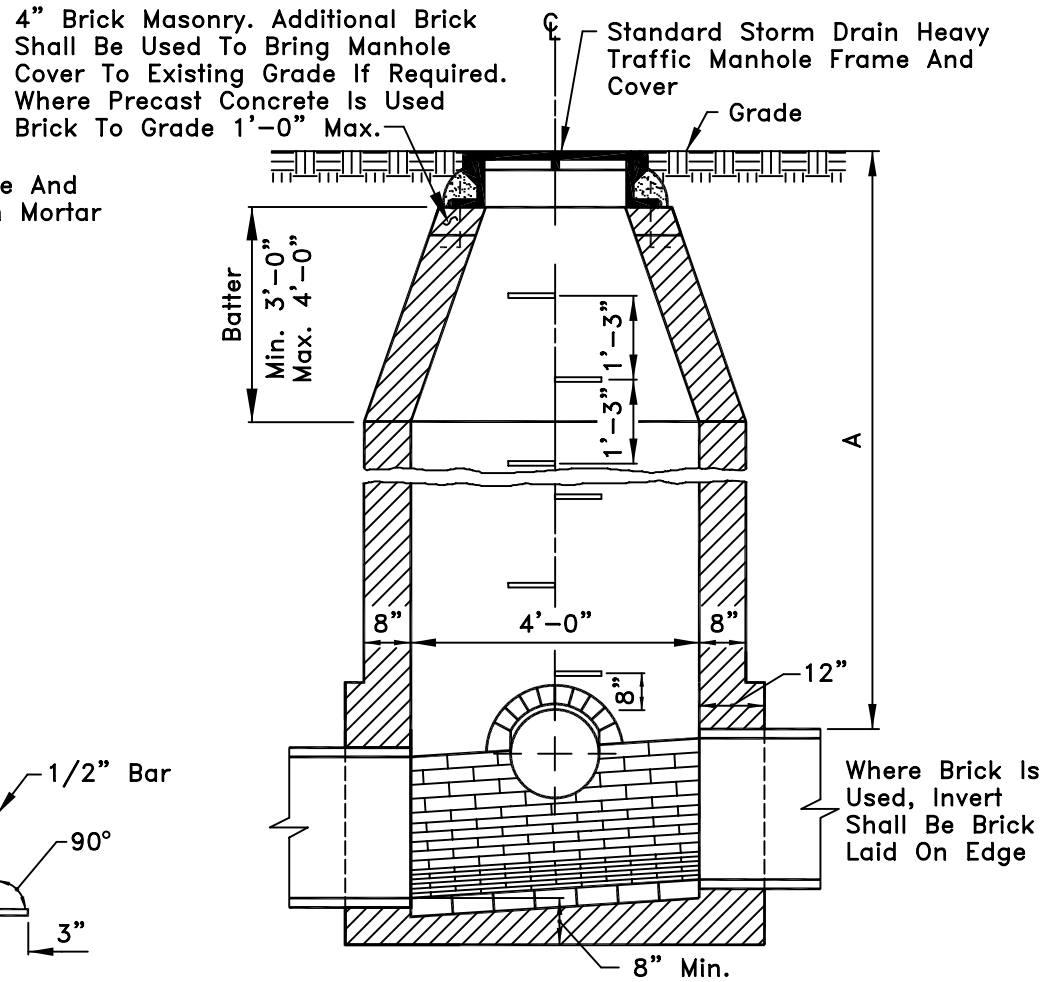

NOTES:

1. For General Notes See Detail SD-6a.
2. If Precast Concrete Is Used In Lieu Of Brick Any Connections To Storm Drain Manholes With Plastic Pipe Requires A-Lok Gaskets Or Approved Equal.
3. Where "A" (Cover) Is Less Than 4'-0" Use Shallow Manhole (For Pipes 36" And Smaller).

SD-6	DRAWN BY: KAT SCALE: NONE	REVISIONS: 1 WHH 2/7/00	1 TYPE "A-1" MANHOLE (FOR NORMAL DEPTHS)	CITY OF FREDERICK Stan Aldridge 7-16-99 APPROVED DATE

CAD

NOTES:

1. Manhole Shall Be Brick Or Plain MSHA Mix No. 2 Concrete Poured In Place.

2. For Pipe Sizes 42" And Larger Use Type "C" Manhole.

3. Use 4-1/2" Dowel Bars Per Manhole, Spaced 90 Apart.

4. Apply two Coats Of A Waterproof Bitumastic Compound Over Cement Mortar.

5. Precast Concrete May Be Used In Lieu Of Brick. Details To Recieve Prior Approval By City Before Use.

6. Where Precast Concrete Is Used Any Connections To Storm Drain Manholes With Plastic Pipe Requires A-Lok Gaskets Or Approved Equal.

7. Use Precast Concrete Grade Rings To Bring 1'- 0" Maximum Where Precast Concrete Is Used.

CITY OF FREDERICK

Stan Aldridge 7-16-99

APPROVED DATE

TYPE "A-1" MANHOLE
(FOR NORMAL DEPTHS)
GENERAL NOTES

REVISIONS:

DRAWN BY: KAT

SCALE: NONE

SD-6a

CAD

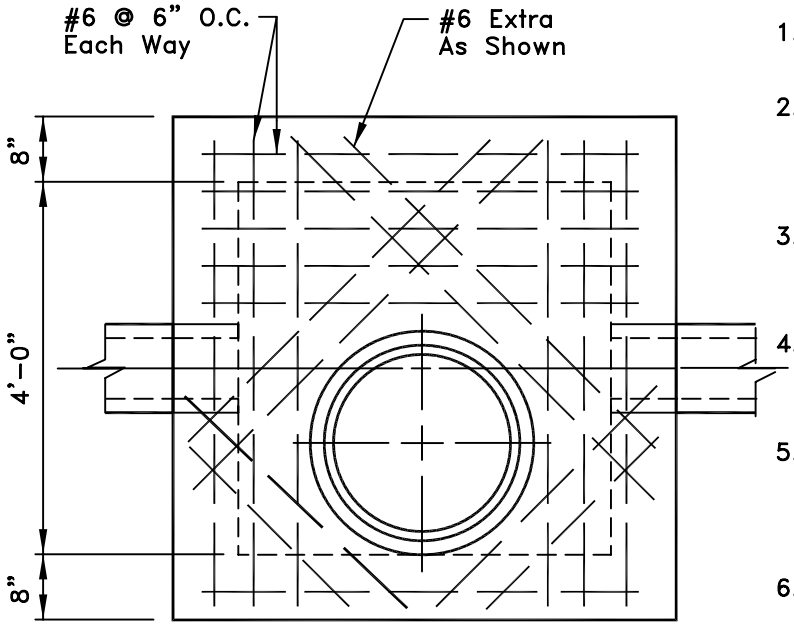

PLAN

NOTES:

1. Manhole Frame And Cover To Be Placed As Shown.
2. Walls, Bottom Slab And Invert Shall Be Brick Or Plain MSHA Mix No. 2 Concrete Poured In Place.
3. Where "A" (Cover) Is Greater Than 4'-0" Use Type "A" Manhole.
4. For Pipe Sizes 42" And Larger Use Type "C" Manhole.
5. Apply Two Coats Of A Waterproof Bitumastic Compound Over Cement Mortar.
6. Precast Concrete May Be Used In Lieu Of Brick. Details To Recieve Prior Approval By City Before Use.
7. Any Connections To Storm Drain Manholes With Plastic Pipe Requires A-Lok Gaskets Or Approved Equal.

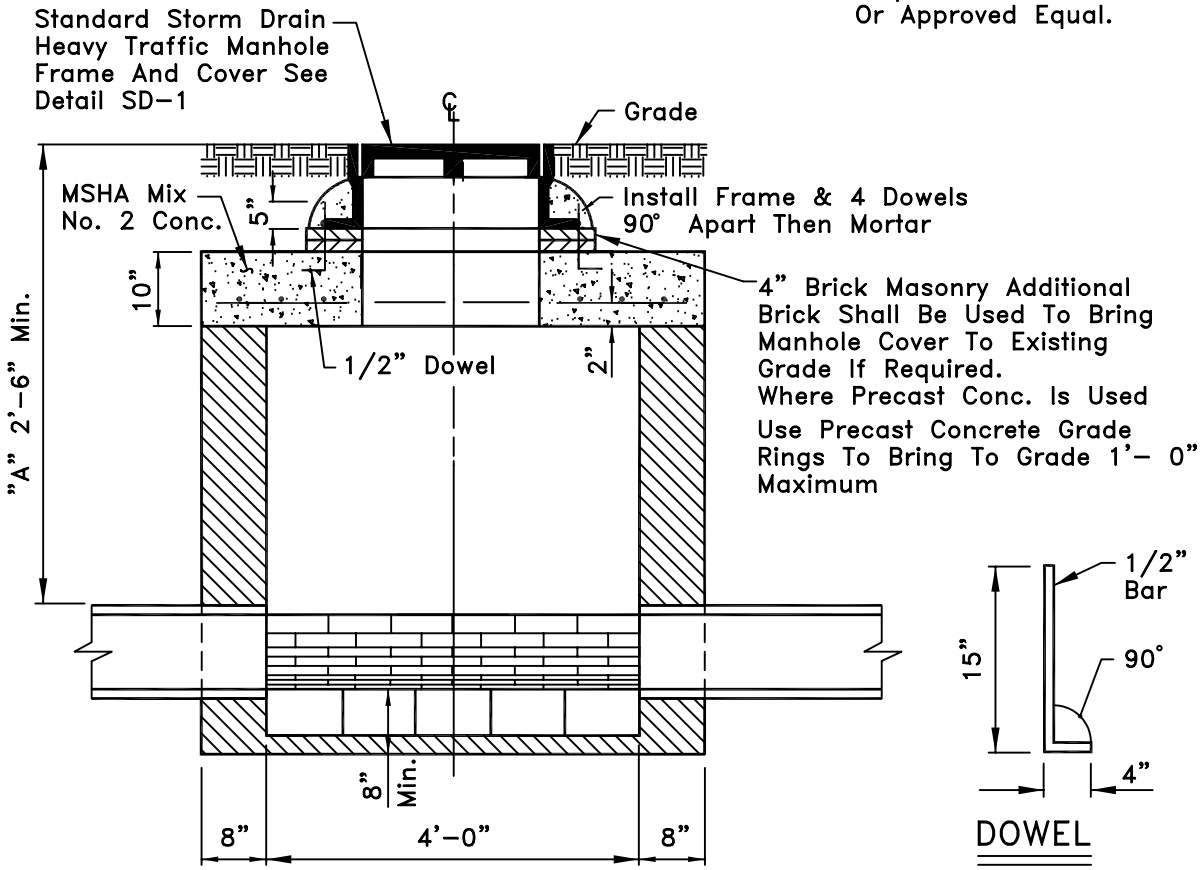

SECTION

DOWEL

Bench Full Height
Of Pipe As Shown
On Type "A" Manhole

CITY OF FREDERICK

APPROVED

DATE 7-16-99

TYPE "B" MANHOLE
(SHALLOW)

REVISIONS:

DRAWN BY: KAT

SCALE: NONE

SD-7

CAD

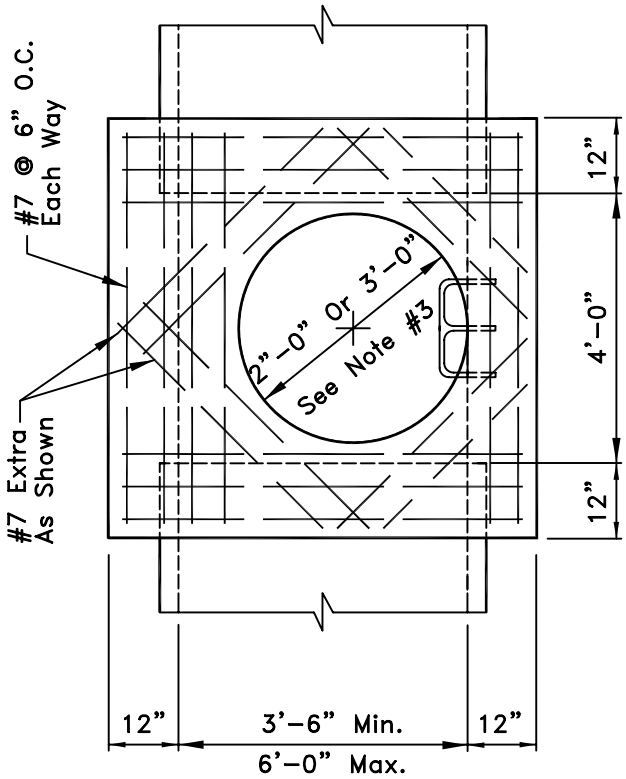

TOP SLAB PLAN

NOTES:

1. Walls, Bottom Slab And Invert Shall Be Brick Or Plain MSHA Mix No. 2 Concrete Poured In Place.
2. For Pipes 36" And Smaller Use Type "A" Or Type "B". Use Type "B" Where "A" (Cover) Is Less Than 3.5'.
3. Where "A" Is Less Than 3'-6" Use Alternate Manhole Stack.
4. Precast Concrete May Be Used In Lieu Of Brick. Details To Recieve Prior Approval By City Before Use.
5. If Precast Concrete Is Used In Lieu Of Brick Any Connections To Storm Drain Manholes With Plastic Pipe Requires A-Lok Gaskets Or Approved Equal.

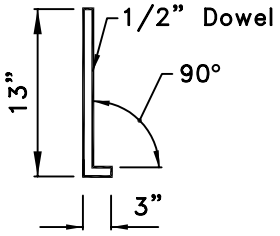

DOWEL

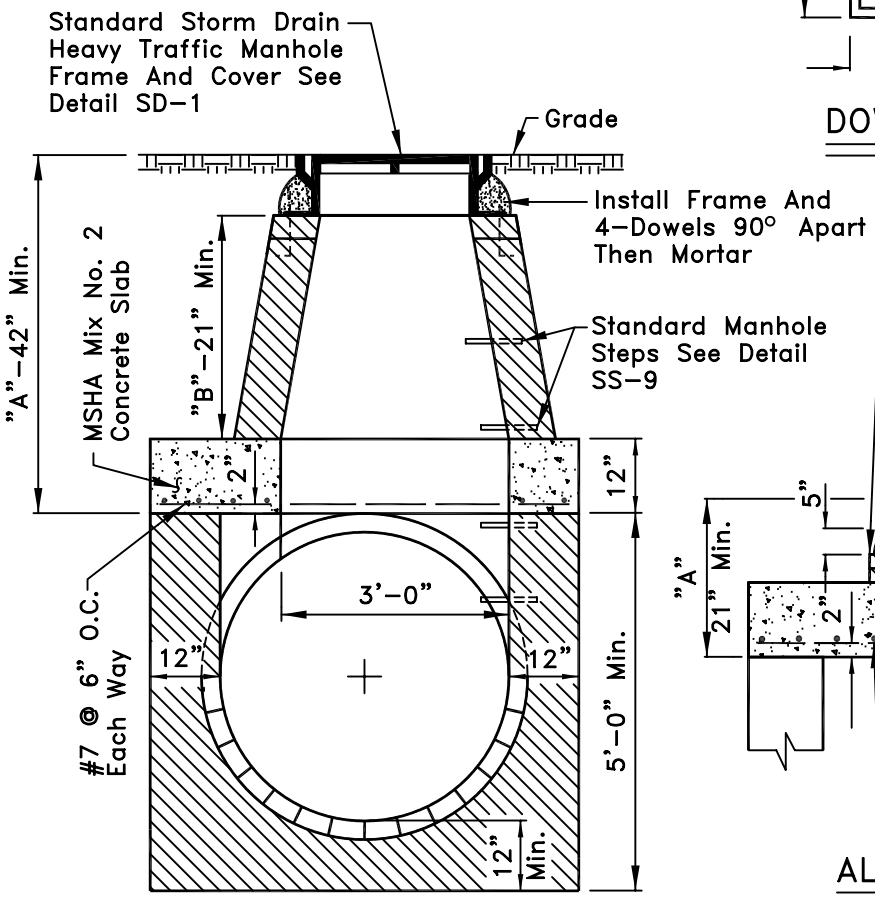

SECTION

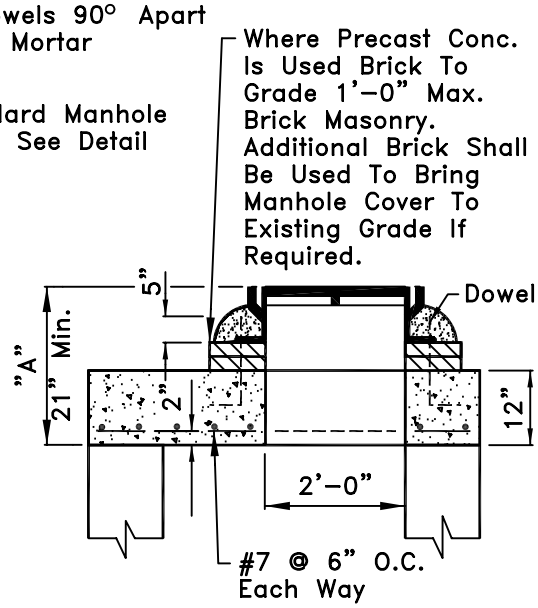

ALTERNATE MANHOLE STACK

(See Note No. 3)

CITY OF FREDERICK

APPROVED Stan Aldridge 7-16-99 DATE

TYPE "C" MANHOLE 42" AND LARGER PIPES

REVISIONS:

DRAWN BY: KAT

SCALE: NONE

SD-8

CAD

NOTES:

1. Identify Manhole By Number And Manufacturer.
2. Brick Or Precast Grade Rings Shall Be Used To Bring Manhole Frame And Cover To Finished Grade, Maximum 12". Mortar To Be Type II Cement.
3. 20" Maximum Between Cover And First Step.
4. 48" Manhole Shall Be Used With 24" And Smaller Pipe.
5. Lifting Holes Shall Be Provided In Base And Top Slab.
6. Any Connections To Storm Drain Manholes With Plastic Pipe Requires A-Lok Gaskets Or Approved Equal.

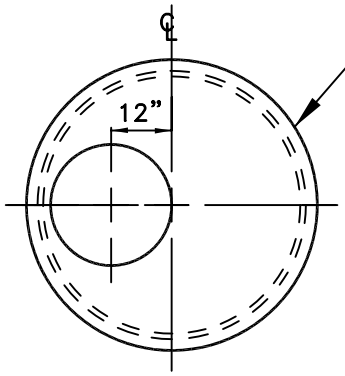

Top Slab Shall Be Precast In Accordance With ASTM C-478 And Shall Use A Flexible "O" Ring Gasket Which Conforms To ASTM C-443/C-361 Or Neoprene ASTM D1056

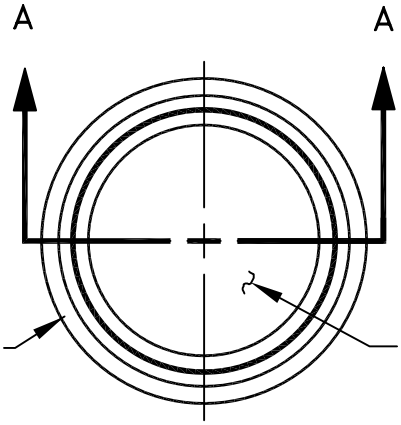

Extended Base Slab Is Optional

Inverts Shall Be Constructed Of Brick

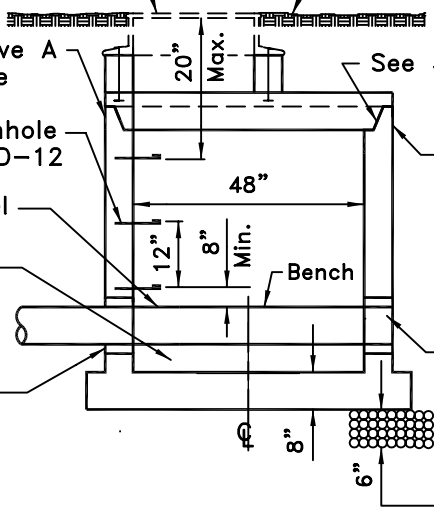

City Of Frederick Standard Manhole Frame & Cover

Existing Grade

Riser Shall Have A Monolithic Base

See Joint Detail Sheet SD-13

Plastic Covered Steel Manhole Steps See Detail Sheet SD-12

Precast Concrete Base And Flat Top Slab Shall Be Manufactured In Accordance With ASTM C-478, Concrete Shall Be Type II Cement

Invert Of Channel

4" Brick Invert

Openings For Pipe Shall Be 4"± Greater Than The O.D. Of The Pipe

Fill Annular Space With Non-Shrink Mortar. For Plastic Pipe A Rubber Gasket Is Required. See Detail Sheets SD-14 And SD-14a

Set The Manhole On Granular Base, SHA Graduation No. 6

SECTION A-A

CITY OF FREDERICK

APPROVED 7-16-99 DATE

PRECAST SHALLOW MANHOLE

REVISIONS:

DRAWN BY: KAT

SCALE: NONE

SD-9

CAD

NOTES:

1. For General Notes See Detail Sheet SD-10a.
2. * All Risers In Each Manhole To Be Same Strength Class.
3. 48" Manhole Shall Be Used With 24" And Smaller Pipe.
4. 48"Manhole Riser Pipe Sections Furnished In 1', 2', 3' And 4' Lengths.
5. Concrete Shall Be Type II Cement.

DEPTH TO INVERT	STEEL REQ'D.	
	*RISER	BASE
0' To 18'	CL. II	CL. III
18' To 23'	CL. III	CL. IV
23' To 28'	CL. IV	CL. V

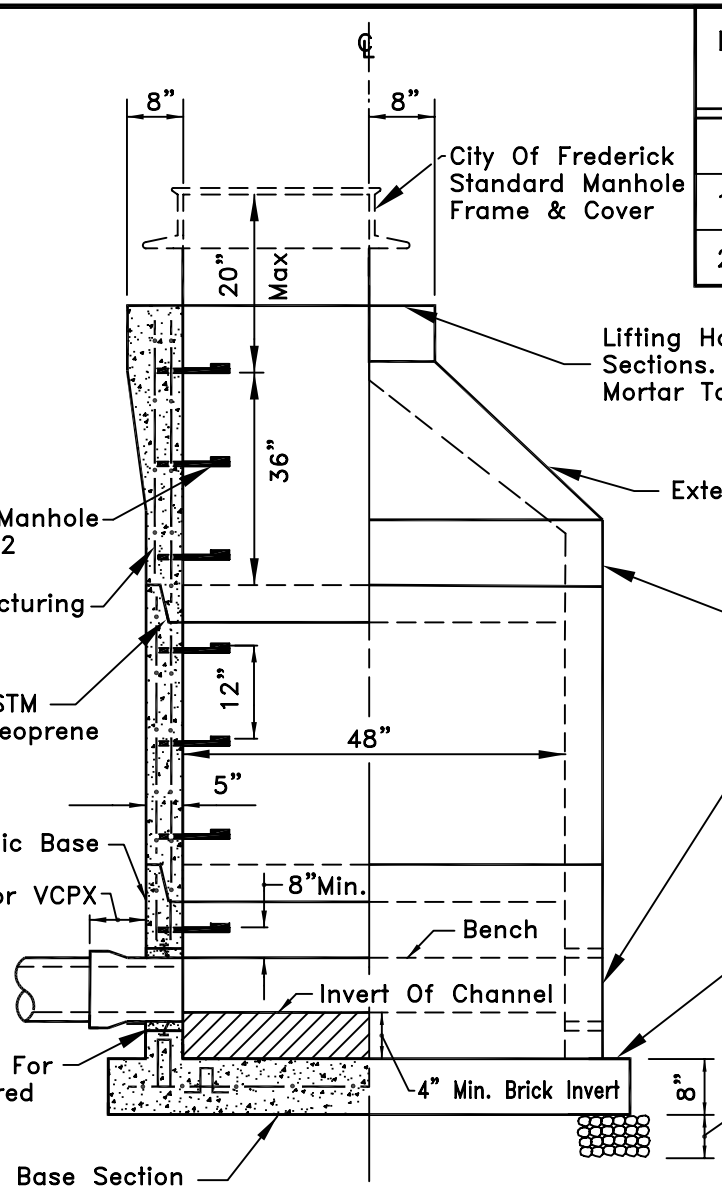

SD-10	DRAWN BY: KAT SCALE: NONE	REVISIONS:	PRECAST CONCRETE MANHOLE 48" DIAMETER	CITY OF FREDERICK Stan Aldridge APPROVED	7-16-99 DATE

CAD

NOTES:

1. Identify Manhole By Number And Manufacturer.

2. 20" Maximum From Manhole Cover To First Manhole Step.

3. Brick Or Precast Grade Rings Shall Be Used To Bring Manhole Frame And Cover To Finished Grade, Maximum 12". Mortar To Be Type II Cement.

4. Any Connections To Storm Drain Manholes With Plastic Pipe Requires A-Lok Gaskets Or Approved Equal.

CITY OF FREDERICK

Stan Aldridge 7-16-99

APPROVED DATE

GENERAL NOTES
PRECAST CONCRETE
MANHOLE 48" DIAMETER

REVISIONS:

DRAWN BY: KAT

SCALE: NONE

SD-10a

CAD

DEPTH TO INVERT	STEEL REQUIRED		
	48" Riser	72" Riser	72" Base
0' To 22'	CL. II	CL. II	CL. III
22" To 29"	CL. II	CL. II	CL. IV
29' To 36"	CL. II	CL. III	CL. V

NOTES:

1. Brick Or Precast Grade Rings Shall Be Used To Bring Manhole Frame And Cover To Finished Grade, Max 12". Mortar To Be Type II Cement.
2. Slab On 48" Riser To Have 24" Opening. Steel To Be Same As 72" Slab Except Bottom Mat To Be All 1/2" Bars.
3. Any Connections To Storm Drain Manholes With Plastic Pipe Requires A-Lok Gaskets Or Approved Equal.
4. Identify Manhole By Number And Manufacturer.
5. Double Warp Circumferential Steel in Bells.
6. Steel In Base To Be 1/2" Diameter @16" O.C. Each Way Minimum.

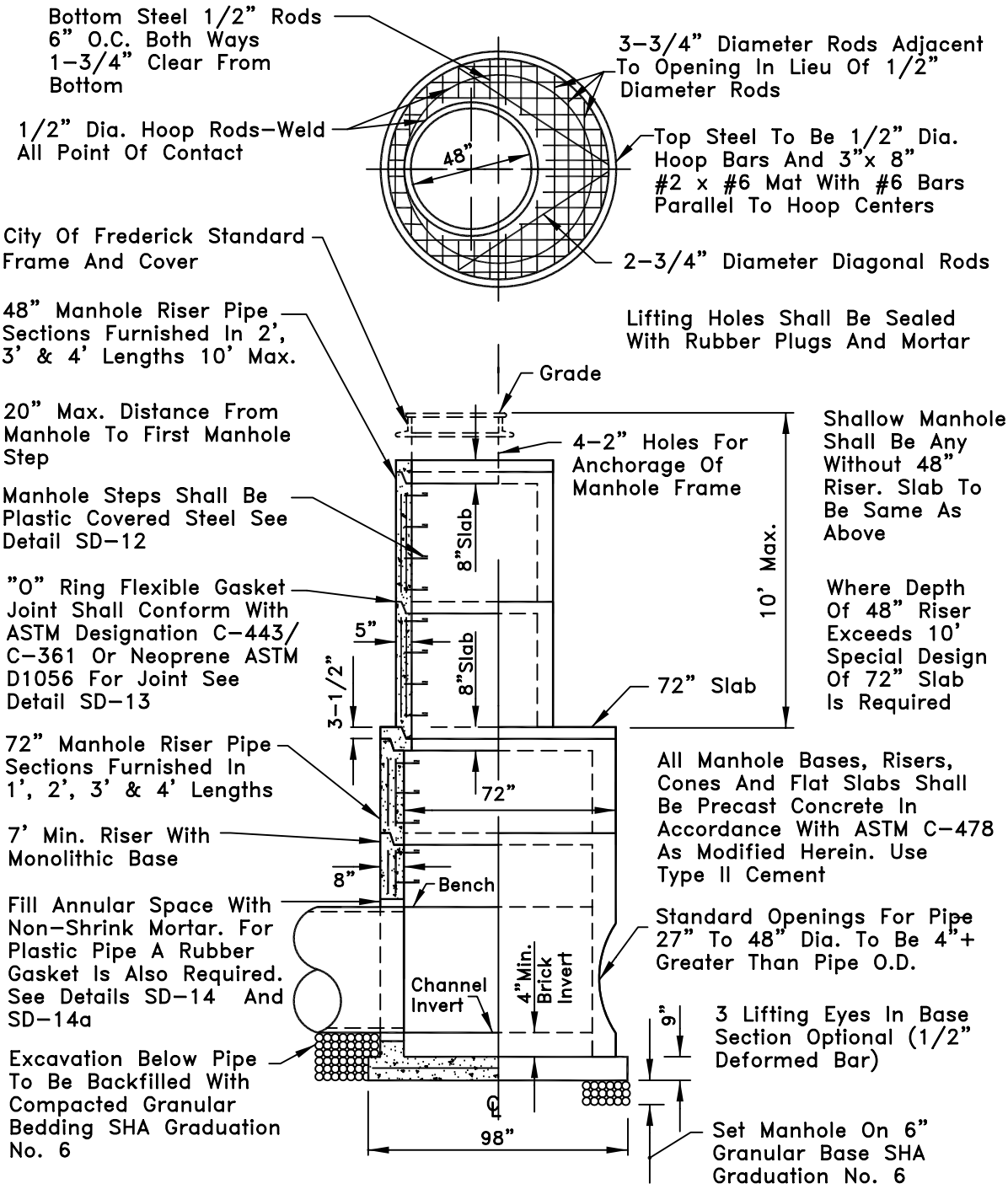

CITY OF FREDERICK

Stan Aldridge 7-16-99

APPROVED DATE

PRECAST CONCRETE
△1 MANHOLE 72" DIAMETER

REVISIONS:
△1 2/7/00

DRAWN BY: KAT
SCALE: NONE

SD-11

CAD

NOTES:

1. Steel Manhole Steps Are Plastic Coated.

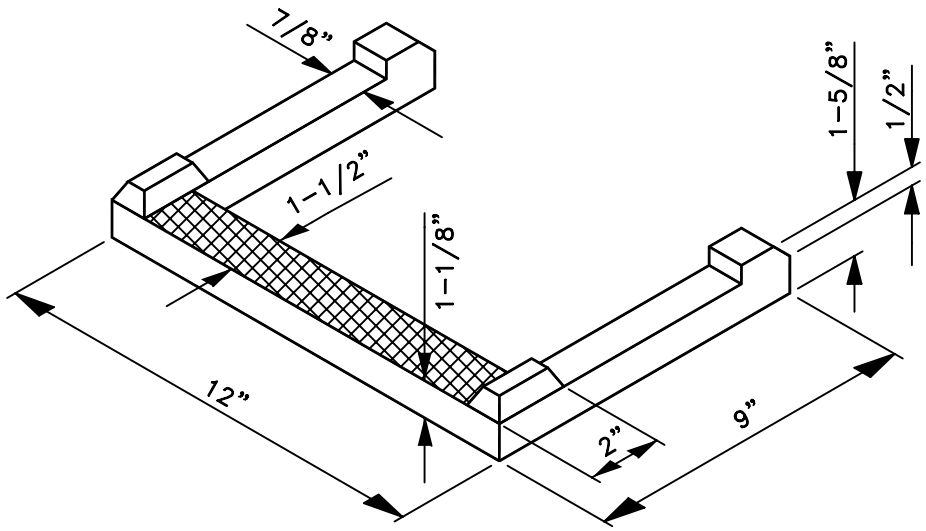

SD-12	DRAWN BY: KAT SCALE: NONE	REVISIONS:		MANHOLE STEP FOR PRECAST MANHOLES	CITY OF FREDERICK Stan Aldridge 7-16-99 APPROVED DATE

CAD

NOTES:

1. Joint Detail Only. Reinforcing Steel Not Shown.

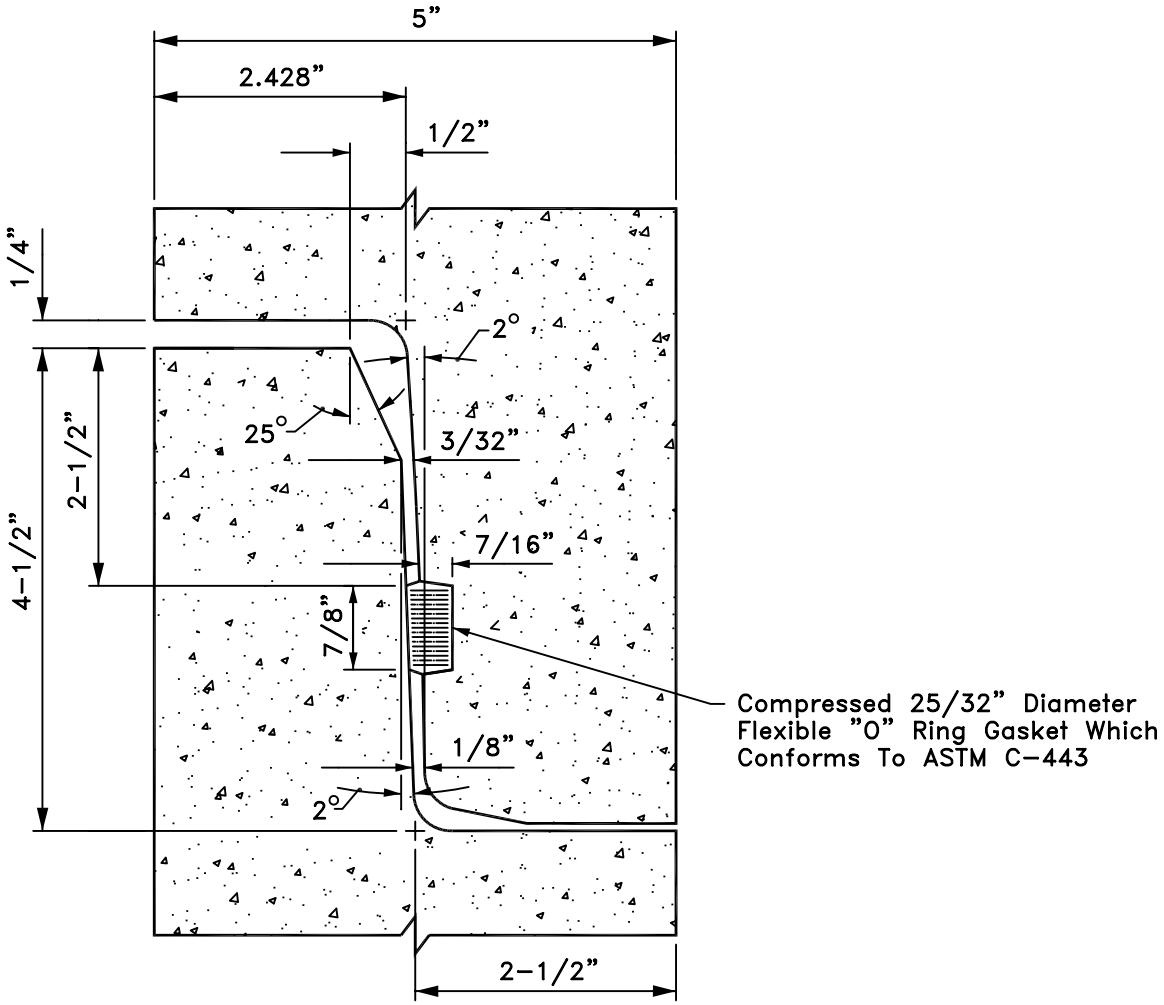

SD-13	DRAWN BY: KAT SCALE: NONE	REVISIONS:		FLEXIBLE "O" RING GASKET JOINT FOR PRECAST MANHOLES	CITY OF FREDERICK Stan Aldridge 7-16-99 APPROVED DATE

CAD

NOTES:

1. Because Of The A–Lok Connector's Ability To Insure A Flexible, Watertight Joint, It Is Recommended That No Mortar Be Placed Around The Connector At All On The Outside Of The Structure And That No Mortar Be Placed Around The Top Half Of The Connector On The Inside When Completing The Invert Work. The Use Of Mortar In Either Of These Areas Would Eliminate The Flexibility For Which The Connector Is Designed And Cause Problems Of Shear.

2. Flexible PVC Adapter Shall Be Stretched Over Plastic Pipe At Centerline Of Manhole Wall. The Adapter Shall Be Designed To Provide A Watertight Seal Around The Plastic Pipe.

3. Pipe To Manhole Seal. A–Lok Gasket Per ASTM Rubber Gasket Specs C443, Cast Integrally In Manhole Wall And Located As Required. Joint Allows 10° Omnidirectional Deflection.

4. Precast Manholes Are To Be Furnished With A–Lok Gaskets Or Approved Equal.

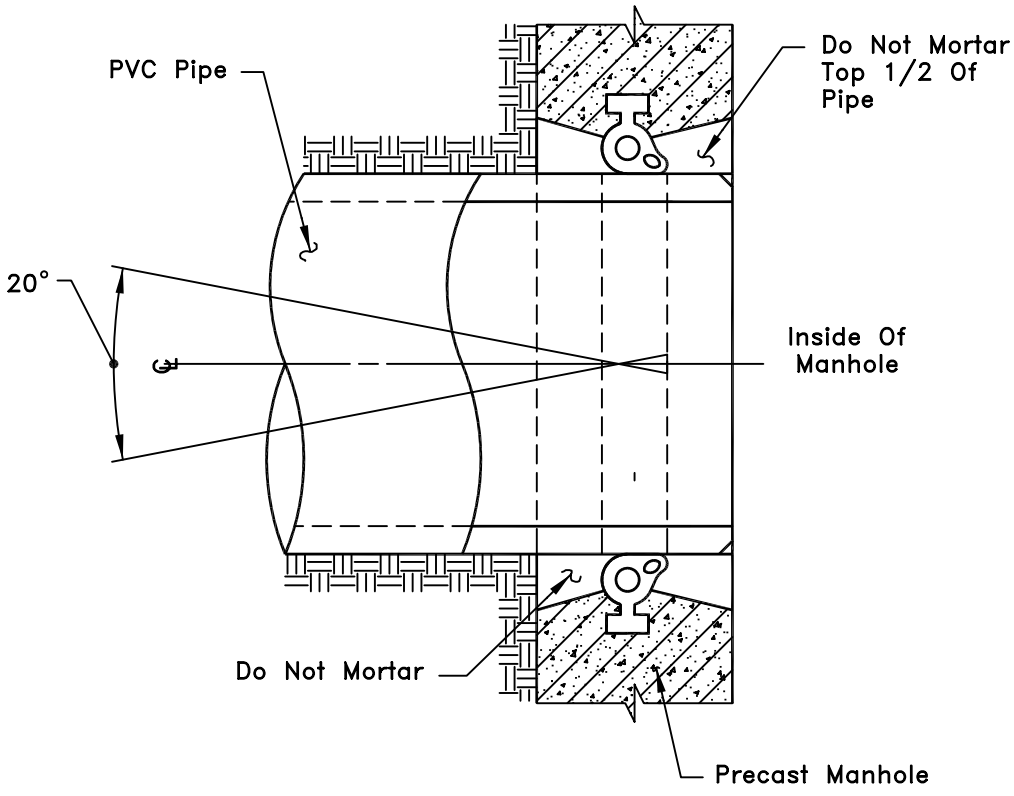

CROSS SECTION

A–LOK AFTER INSTALLATION

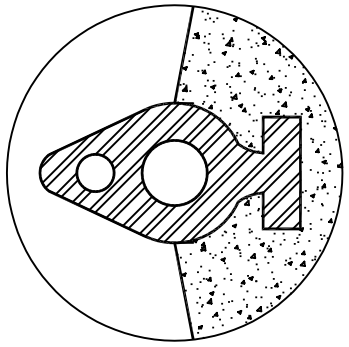

CROSS SECTION

A–LOK BEFORE INSTALLATION

SD–14	DRAWN BY: KAT SCALE: NONE	REVISIONS:		FLEXIBLE PVC ADAPTER INSTALLATION	CITY OF FREDERICK Stan Aldridge 7–16–99 APPROVED DATE

CAD

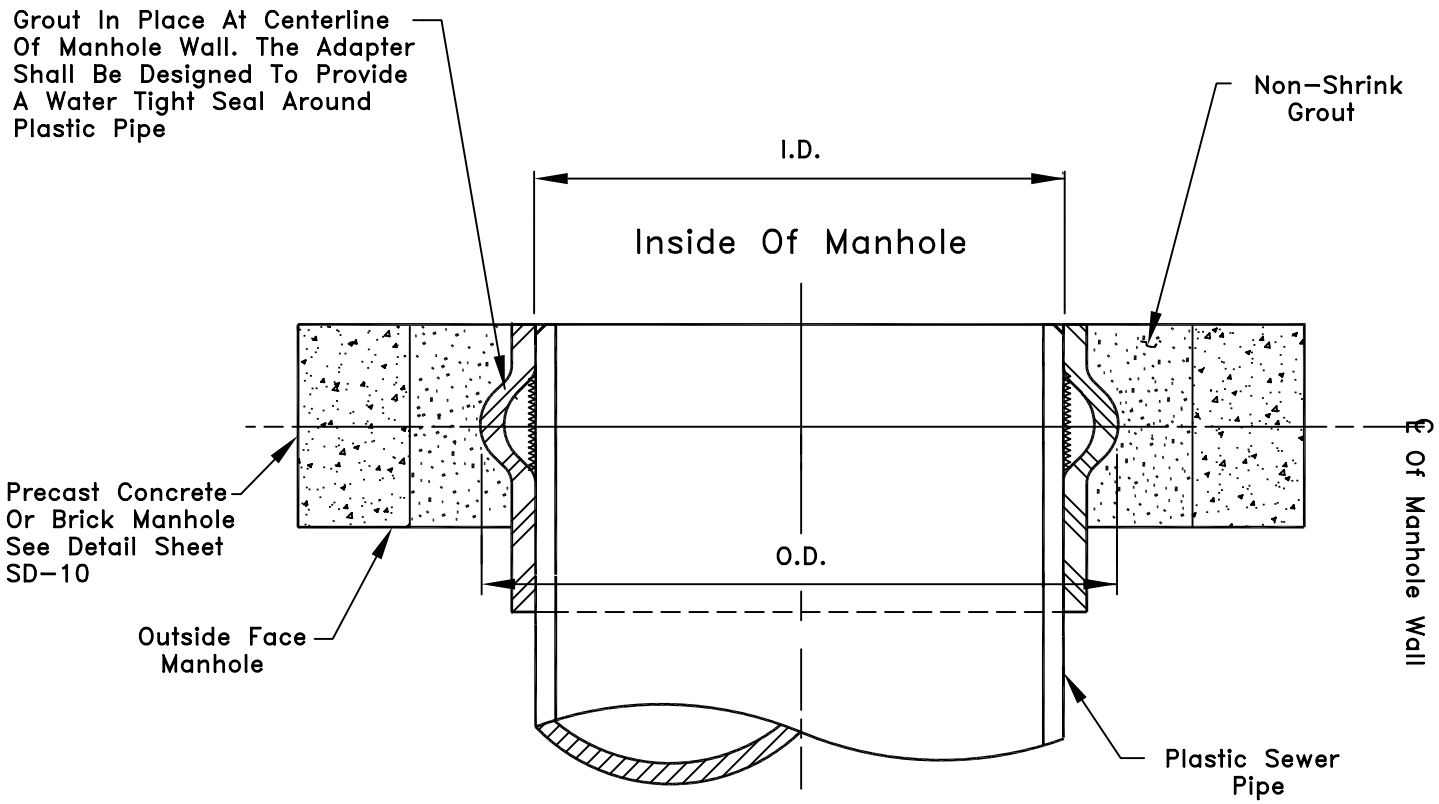

NOTES:

1. All Grout Shown Shall Be Non-Shrink.
2. Adapter By Vassallo, Inc. Or Approved Equal.
3. * Cut Flush With Inside Of Manhole And Bench Inside Manhole.

MANHOLE SLEEVE		
SIZE	O.D.	I.D.
4"	5.406	4.246
6"	7.585	6.310
8"	9.904	8.430
10"	12.280	10.535
12"	14.482	12.540
15"	17.627	15.350
18"	21.319	18.780
21"	25.617	22.115
24"	28.485	24.880
27"	31.514	28.040

SD-14a	DRAWN BY: SCALE: NONE	REVISIONS:	PVC MANHOLE ADAPTER DETAIL FOR CONNECTIONS TO EXISTING MANHOLES	CITY OF FREDERICK Stan Aldridge APPROVED	171-262-995 DATE

CAD

NOTES:

1. For General Notes See Detail SD-15a.
2. For Precast Manhole Built On Existing PVC Pipe See Detail Sheet SD-16.
3. Any Connections To Storm Drain Manholes With Plastic Pipe Requires A-Lok Gaskets Or Approved Equal.

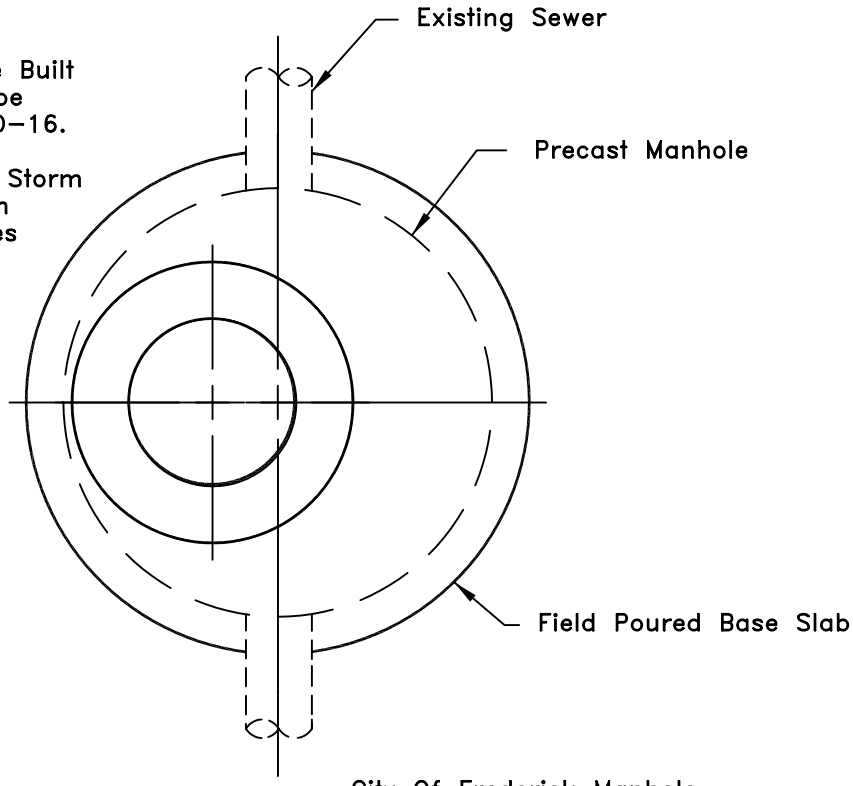

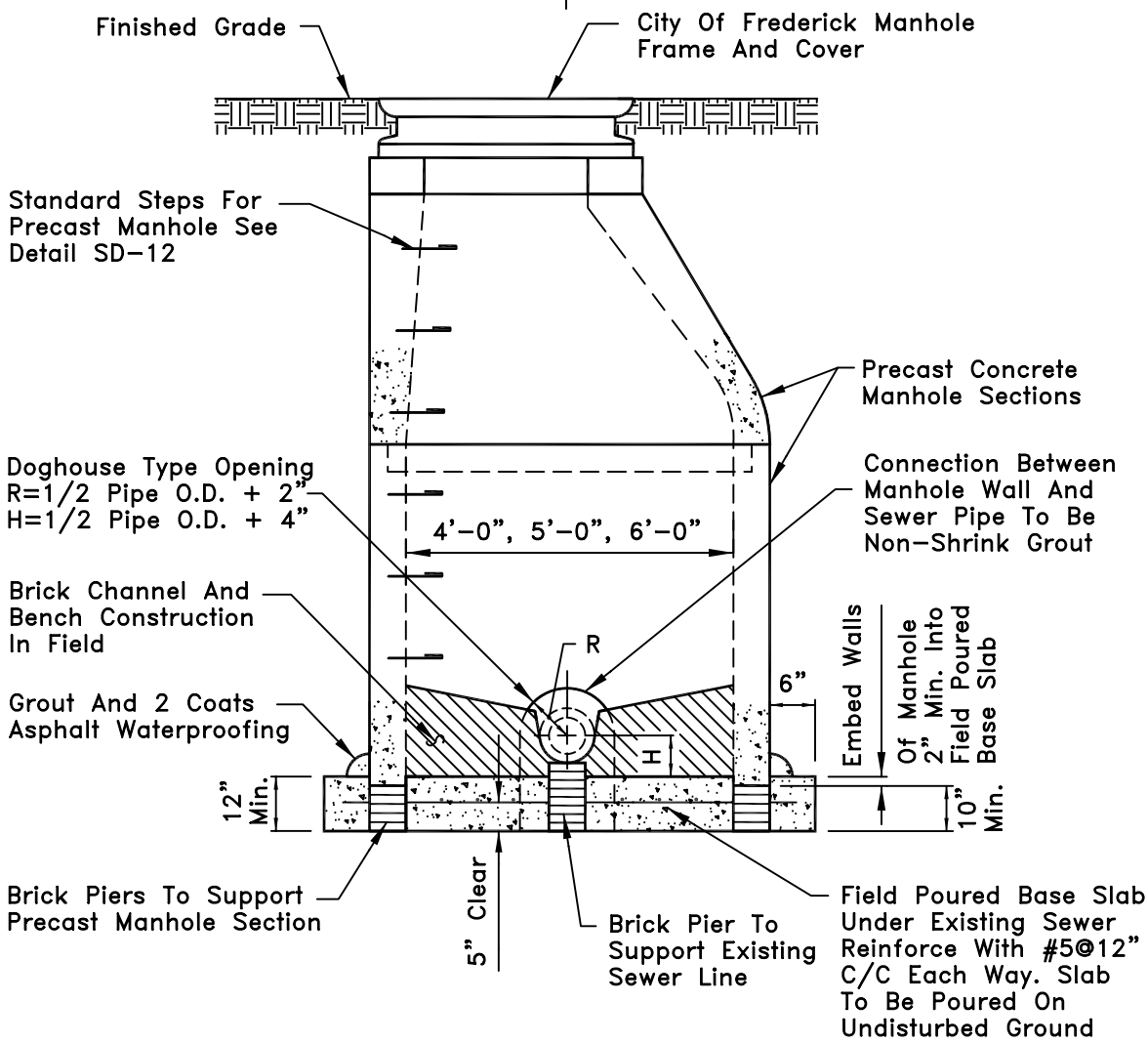

CITY OF FREDERICK

Stan Aldridge 7-16-99

APPROVED DATE

PRECAST CONCRETE MANHOLE BUILT OVER EXISTING SEWER

REVISIONS:

DRAWN BY: KAT

SCALE: NONE

SD-15

CAD

NOTES:

1. Extreme Caution To Be Used In Digging Adjacent To Existing Sewer Line.

2. Excavation Directly Below Existing Sewer Line To Be Done By Hand.

3. Support Existing Sewer Line With Brick Piers As Needed.

4. All Concrete Shall Be Made With Type II Cement.

5. 20" Maximum Between Manhole Cover And First Manhole Step.

6. Top Of Existing Sewer Line To Be Removed As Needed And As Directed In The Field By City Inspectors.

7. Any Connections To Storm Drain Manholes With Plastic Pipe Requires A-Lok Gaskets Or Approved Equal.

CITY OF FREDERICK

Stan Aldridge 7-16-99

APPROVED DATE

PRECAST CONCRETE MANHOLE
BUILT OVER EXISTING SEWER
GENERAL NOTES

REVISIONS:

DRAWN BY: KAT

SCALE: NONE

SD-15a

CAD

NOTES:

1. For General Notes See Detail SD-16a.
2. For Precast Manhole Built Over Existing Sewer See Detail SD-15.
3. Maintain And Handle Sewer Flow During Installation.
4. Any Connections To Storm Drain Manholes With Plastic Pipe Requires A-Lok Gaskets Or Approved Equal.

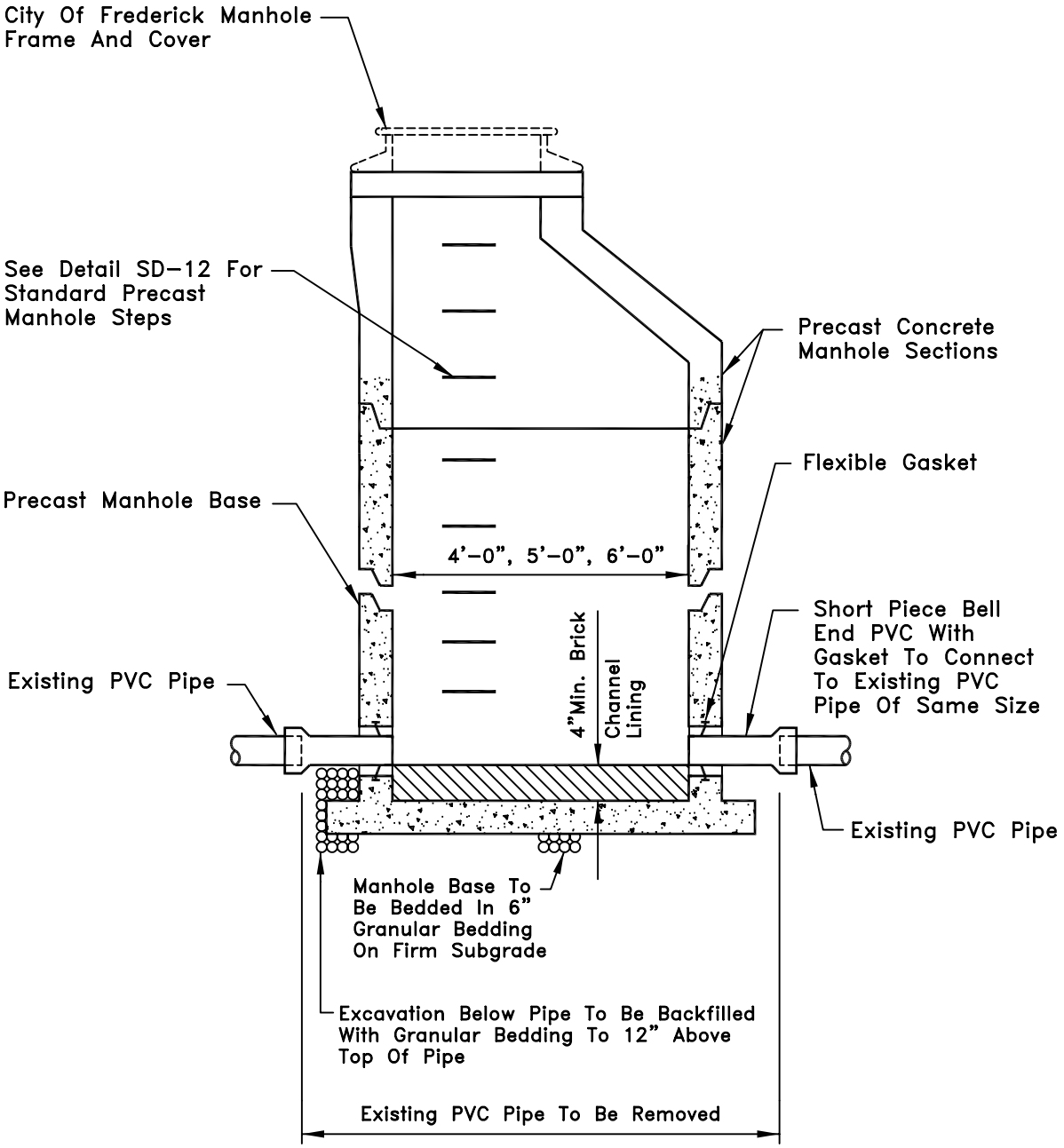

CITY OF FREDERICK

Stan Aldridge 7-16-99

APPROVED DATE

PRECAST CONCRETE MANHOLE BUILT ON EXISTING PVC PIPE

REVISIONS:

DRAWN BY: KAT

SCALE: NONE

SD-16

CAD

NOTES:

1. Extreme Caution To Be Used In Digging Adjacent To Existing Sewer Line.

2. All Concrete Shall Be Made With Type II Cement>

3. 20" Maximum Between Manhole Cover And First Manhole Step.

4. Existing Sewer Line To Be Removed As Needed And As Directed In The Field By City Inspectors.

5. Any Connections To Storm Drain Manholes With Plastic Pipe Requires A-Lok Gaskets Or Approved Equal.

CITY OF FREDERICK

Stan Aldridge 7-16-99

APPROVED DATE

PRECAST CONCRETE MANHOLE
BUILT ON EXISTING PVC PIPE
GENERAL NOTES

REVISIONS:

DRAWN BY: KAT

SCALE: NONE

SD-16a

CAD

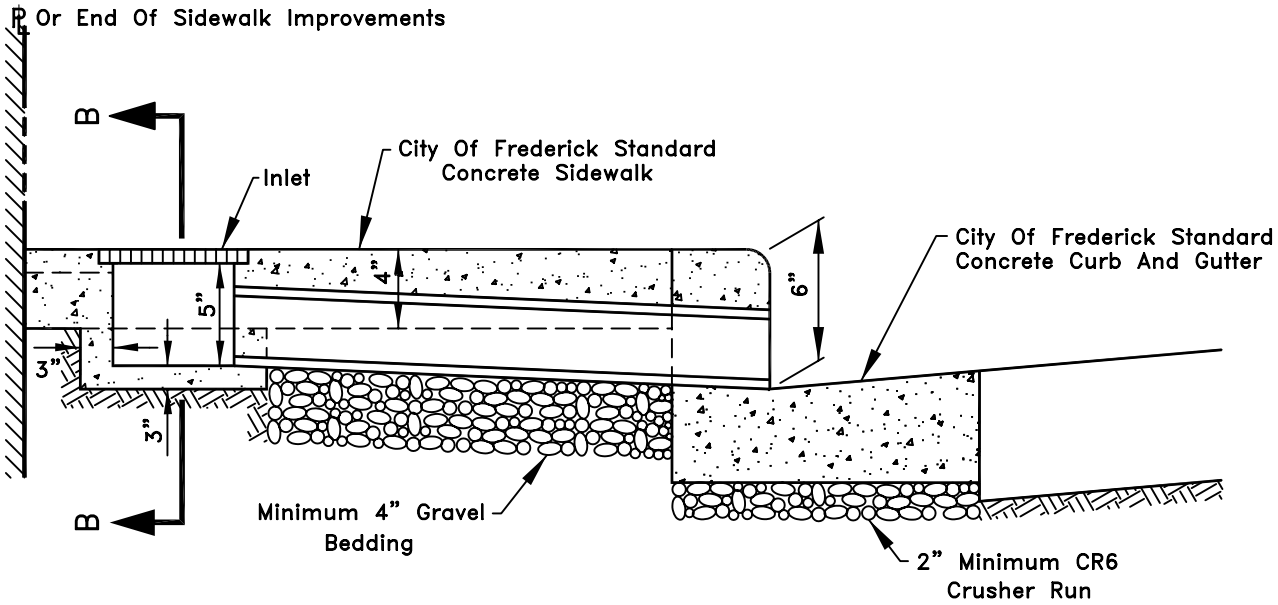

SECTION A–A

NOTES:

1. Inlet Grate To Be B & C Utility Supply, Inc. Design No. Q–10–10 Or Approved Equal.

2. For Reversible Frame And Grate Details See Sheet SD–17a.

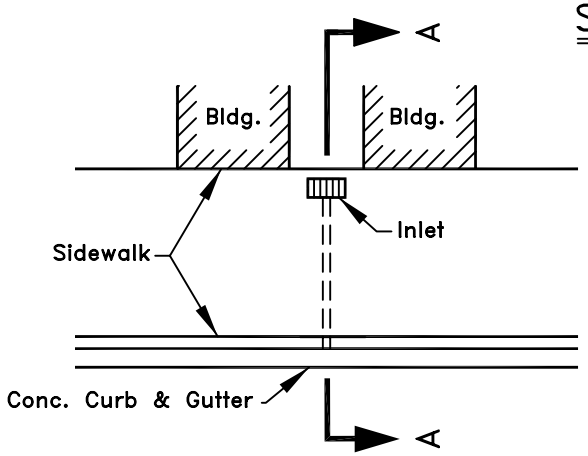

PLAN

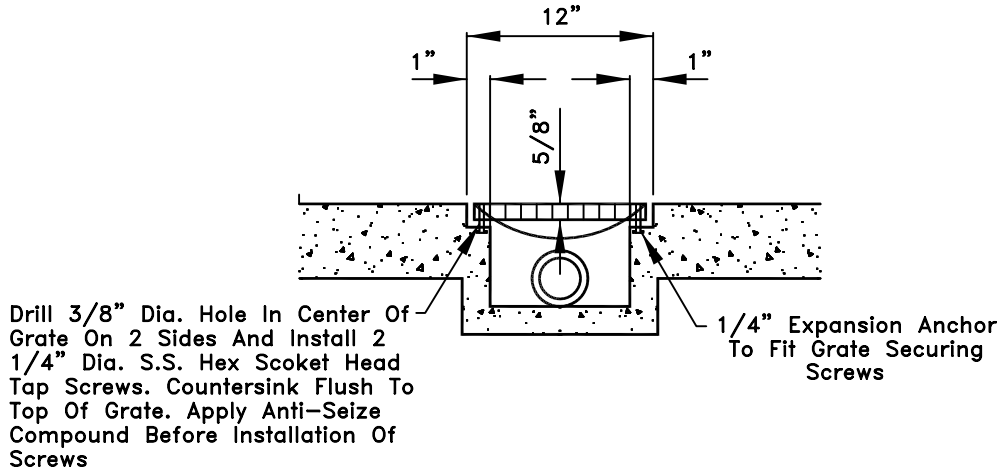

SECTION B–B

SD–17	DRAWN BY: KAT SCALE: NONE	REVISIONS:		SPECIAL SIDEWALK INLET	CITY OF FREDERICK Stan Aldridge APPROVED 7–16–99 DATE

CAD

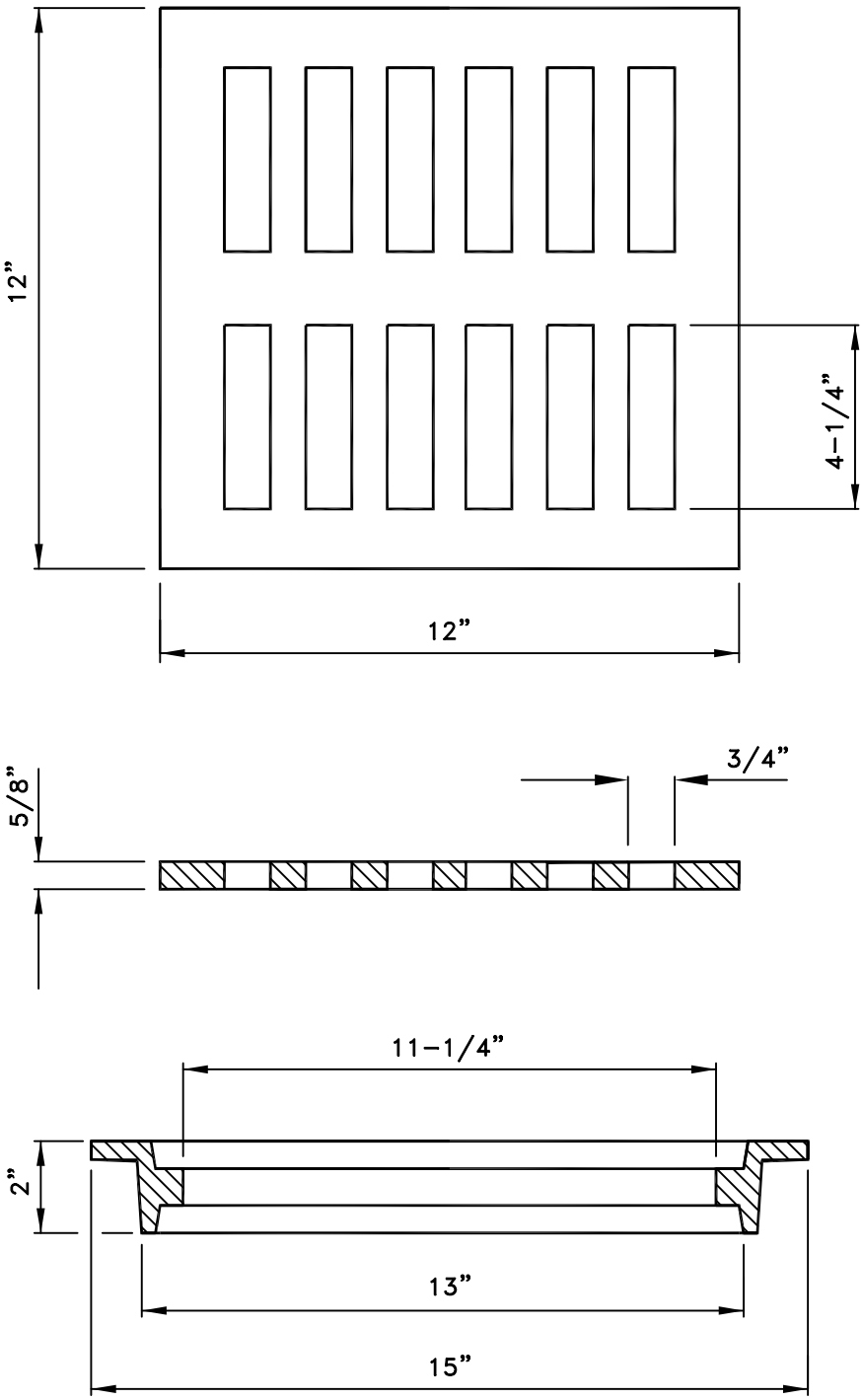

NOTES:

1. Material To Be ASTM A-48 Class 30.
2. For Plan And Section Views See Detail SD-17.

CITY OF FREDERICK

APPROVED 7-16-99 DATE

REVERSIBLE FRAME AND GRATE
SPECIAL SIDEWALK INLET

REVISIONS:

DRAWN BY: KAT
SCALE: NONE

SD-17a

CAD

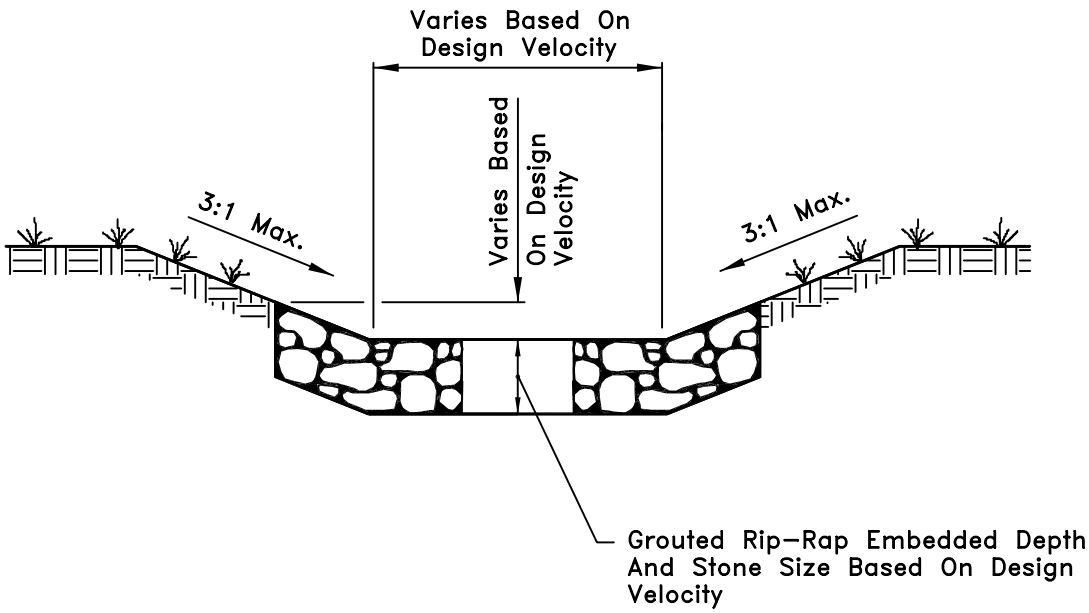

NOTES:

1. Use Class Of Rip-Rap Stone Specified By Engineer.

2. Excavate Footing Trench Along Toe Of Slope As Indicated On Plans.

3. Remove Unsuitable Subgrade Material And Replave With Suitable Material (Refer To The Standard Specification Sections Regarding Suitable And Unsuitable Materials).

4. Place Larger Rock In The Footing Trench With Their Longitudinal Axis Normal To Embankment Face.

5. Place Stones With Joints As Close As Possible.

6. Fill Spaces Between Larger Stones With Stone Of Suitable Size, Leaving The Surface Reasonably Smooth And Tight.

7. Keep Earth Or Sand From Filling The Spaces Between The Stones.

8. Fill The Spaces Between The Stones With Grout Consisting Of One Part Portland Cement To Three Parts Sand.

9. When Grout Has Partially Hardened Sweep Surface With Stiff Broom To Remove Grout Extending Above Surface Of Rip-Rap And Grout Which Has Covered The Stone Surface.

CITY OF FREDERICK

Stan Aldridge 7-16-99

APPROVED DATE

GROUTED
RIP-RAP CHANNEL

REVISIONS:

DRAWN BY: KAT

SCALE: NONE

SD-18

CAD

NOTES:

1. For General Notes See Detail Sheet SD–20b.
2. △1 Channel To Be Galvanized Steel.
3. * See Detail Sheet SD–20b Note No. 5.
4. △1 For Precast Structure Requirements See Detail Sheet SD–20b Note No. 12.

DESIGNATION	T THROAT OPENING	NUMBER OF OF PIPE SUPPORTS
A – 5	5' 0"	0
A – 10	10' 0"	1
A – 15	15' 0"	2
A – 20	20' 0"	3

Pipe Supports To Be Spaced 5'0" O.C.

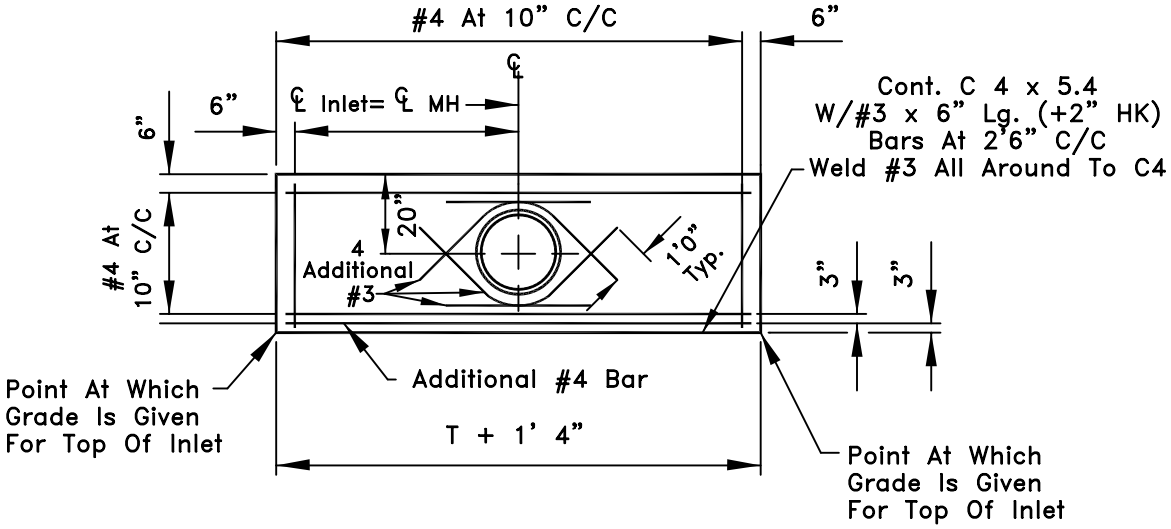

PLAN – TOP SLAB

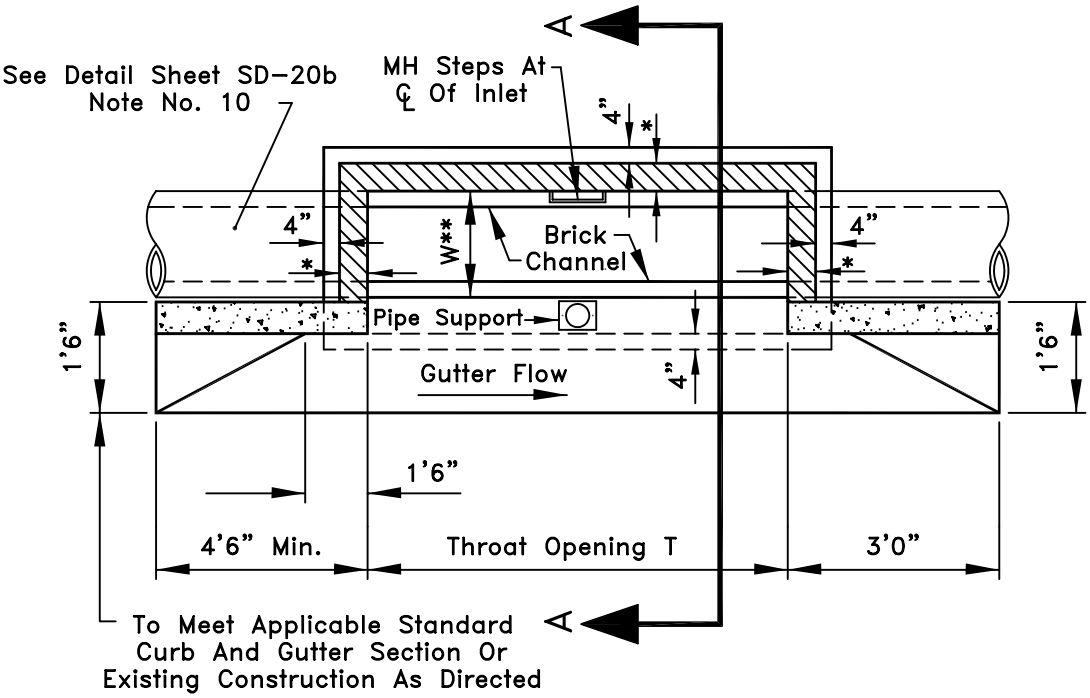

PLAN – BELOW SLAB

CITY OF FREDERICK

Stan Aldridge 7-16-99
APPROVED DATE

COS/COG INLET PLANS

REVISIONS:
△1 8/01/01

DRAWN BY: KAT
SCALE: NONE

SD–20

CAD

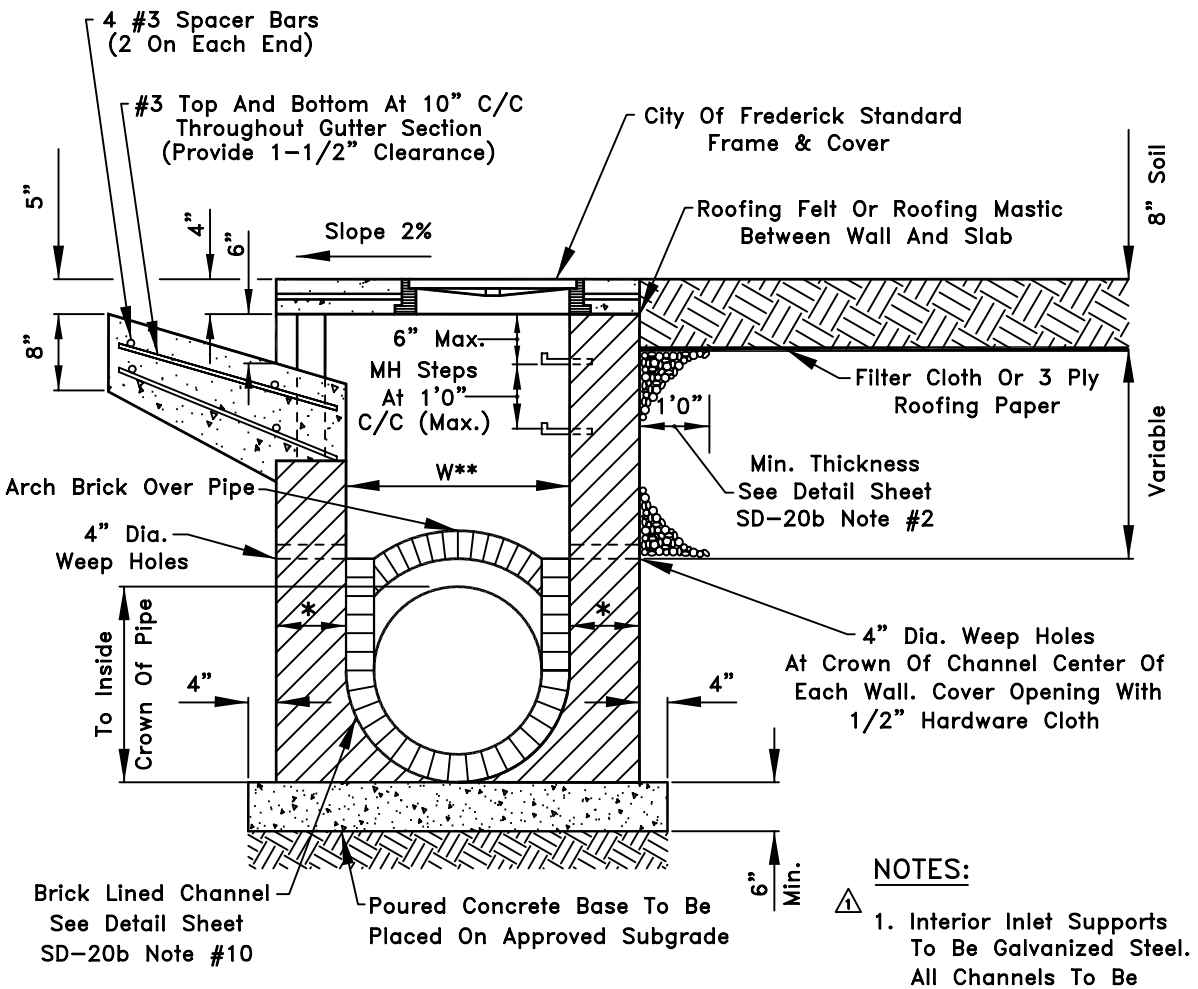

** Outside Diameter Of Largest Pipe
Or 2'6" Min. (Unless Otherwise Noted).

* See Detail Sheet SD-20b Note #5.

SECTION A-A

NOTES:

1. Interior Inlet Supports To Be Galvanized Steel. All Channels To Be Galvanized Steel.
2. For Precast Structure Requirements See Detail Sheet SD-20b Note No. 12.

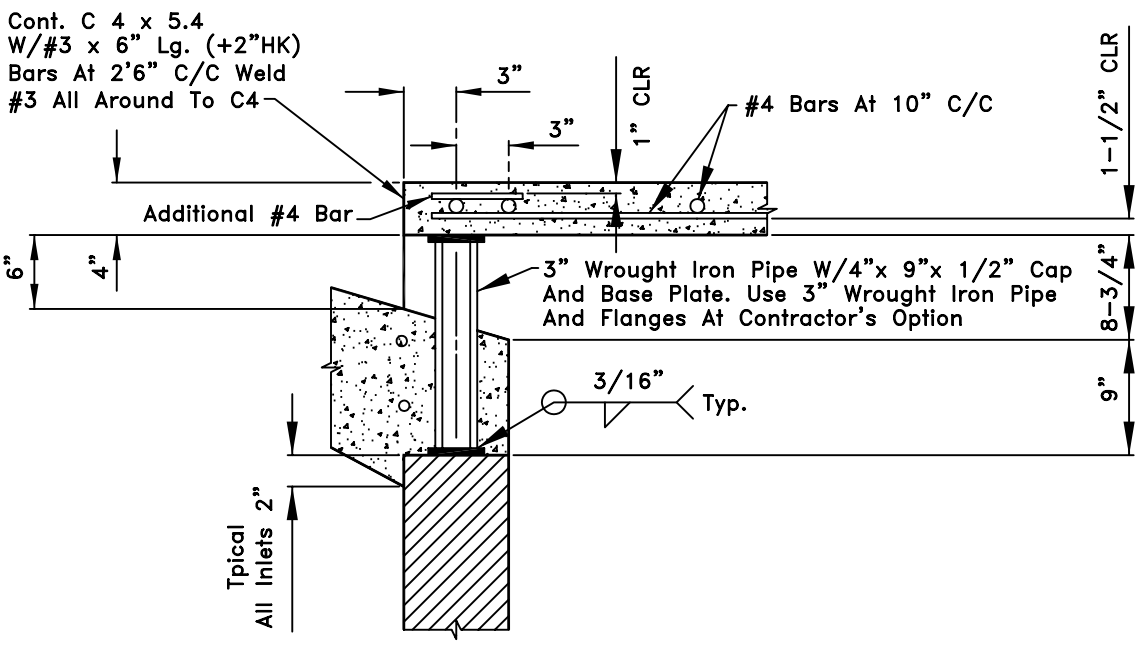

SECTION THROUGH PIPE SUPPORT

CITY OF FREDERICK
APPROVED
7-16-99
DATE

COS/COG INLET SECTIONS

REVISIONS:
1 8/01/01

DRAWN BY: KAT
SCALE: NONE

SD-20a

CAD

GENERAL NOTES:

1. Use Solid Masonry (Brick Or Concrete Block) Or Poured Concrete For Walls.

2. Install Foundation Drainage Material Around Structure From Bottom Of Weep Holes To Within 8" Of Surface.

3. Mortar Shall Conform To ASTM Specification C 270 Type "M".

4. Refer To Maryland State Highway Administration For Materials And Methods Of Construction.

5. Wall Thickness Will Be The Following: 8" Thick Walls For The First 8'– 0" Of Depth, 12" Thick Walls Between 8'– 0" And 12'– 0" Of Depth, 16" Thick Walls For Depth Greater Than 12'– 0". Depth To Be Measured From Top Of Curb To Crown Of Outgoing Pipe.

6. f'c = 3500 PSI At 28 Days.

7. All Reinforcing Steel To Be ASTM A615, GR 60.

△1 8. Where Adequate To Support Lateral Earth Pressures, Inlet Loading And Adequate To Provide Required Edge Clearances For Inflow And Outflow Pipes, Round Bases May Be Substituted For Rectangular Bases For Storm Drain Inlets.

△1 9. For Pipes 30" And Larger, Provide Steps In Channels Of Structures.

△1 10. On Terminal Inlets, The Inlet Bottom Shall Be Sloped To Outlet Pipe With Sewer Brick Or Concrete. 9" Min. Fall.

△1 11. For Actual Pipe Locations, Refer To Storm Drain Plans And Construct Brick Channel To Pipe Configurations. Brick Channel Shall Be Sewer Brick On Edge And Built To The Crown Of The Pipes.

△1 12. Precast COS/COG Inlet Structures Are Only Permissible Provided Shop Drawings Which Have Been Signed And Sealed By A Professional Engineer And Submitted To The City Engineer And Have Received His Approval Prior To Any Construction.

CITY OF FREDERICK
Stan Aldridge 7-16-99
APPROVED DATE

COS/COG INLET
GENERAL NOTES

REVISIONS:
△1 KAT 8/01/01

DRAWN BY: KAT
SCALE: NONE

SD-20b

CAD

OPEN

SD-21	DRAWN BY: SCALE: NONE	REVISIONS:			CITY OF FREDERICK APPROVED DATE

CAD

OPEN

SD-21a	DRAWN BY: SCALE: NONE	REVISIONS:			CITY OF FREDERICK APPROVED DATE

CAD