M-1	BRONZE PLAQUE
M-1a	BRONZE PLAQUE SPECIFICATIONS
M-1b	BRONZE PLAQUE GENERAL NOTES
M-2	DUMPSTER DETAIL
M-2a Sheet (1 Of 3)	DUMPSTER ENCLOSURE (1) 4 OR 6 CUBIC YARD CONTAINER FRONT AND REAR VIEWS
M-2a Sheet (2 Of 3)	DUMPSTER ENCLOSURE (1) 4 OR 6 CUBIC YARD CONTAINER SIDE VIEW AND CONCRETE SLAB
M-2a Sheet (3 Of 3)	DUMPSTER ENCLOSURE (1) 4 OR 6 CUBIC YARD CONTAINER TOP AND SECTION VIEWS
M-2b Sheet (1 Of 4)	DUMPSTER ENCLOSURE (2) 4 OR 6 CUBIC YARD CONTAINERS FRONT VIEW
M-2b Sheet (2 Of 4)	DUMPSTER ENCLOSURE (2) 4 OR 6 CUBIC YARD CONTAINERS TOP VIEW
M-2b Sheet (3 Of 4)	DUMPSTER ENCLOSURE (2) 4 OR 6 CUBIC YARD CONTAINERS REAR VIEW AND BOLLARD SECTION

M-2b (Sheet 4 Of 4)	DUMPSTER ENCLOSURE (2) 4 OR 6 CUBIC YARD CONTAINERS SIDE VIEW AND CONCRETE SLAB
M-2c	DUMPSTER ENCLOSURE DEPRESSED CURB AND RAMP DETAILS
M-2d (Sheet 1 Of 2)	DUMPSTER ENCLOSURE GENERAL NOTES
M-2d (Sheet 2 Of 2)	DUMPSTER ENCLOSURE GENERAL NOTES
M-3	OPEN
M-4	BUS SHELTER PLAN AND ELEVATIONS
M-4a	BUS SHELTER DETAILS
M-4b	BUS SHELTER DETAILS
M-4c	BUS SHELTER CONCRETE SLAB AND ANCHOR DETAILS
M-4d	BUS SHELTER WOOD BENCH AND BACKREST PLAN AND SECTION
M-4e	BUS SHELTER LITTER RECEPTACLE
M-4f	BUS SHELTER SPECIFICATIONS
M-4g	BUS SHELTER SPECIFICATIONS
M-4h	BUS SHELTER SPECIFICATIONS

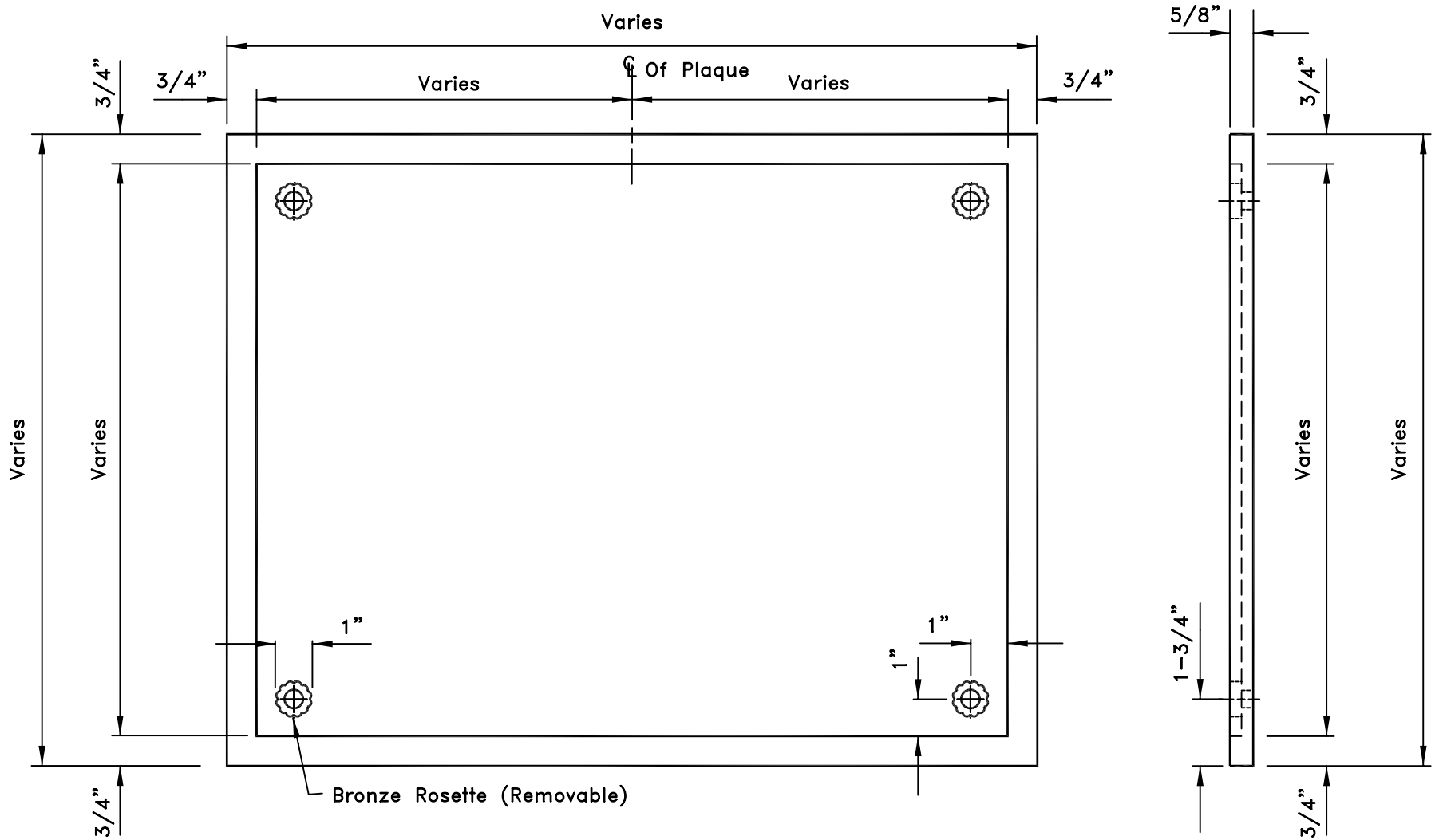

NOTES:

1. For Plaque Specifications See Detail M-1a.
2. For General Notes See Detail M-1b.

M-1	DRAWN BY: KAT SCALE: NONE	REVISIONS:		BRONZE PLAQUE	CITY OF FREDERICK Stan Aldridge 7-16-99 APPROVED DATE

CAD

SPECIFICATIONS FOR BRONZE PLAQUE

METALS: Form letters from the following metal:

Aluminum Castings: Alloy and temper recommended by aluminum producer of finishes for casting process used and finish indicated.

CAST LETTERS AND NUMBERS: Produce cast characters from metal indicated with smooth flat faces, sharp corners, precisely formed lines and profiles, and free from pits, scale, sand holes or other defects. Cast lugs into backs of characters and tap to receive threaded mounting studs. Bronze finish.

CAST METAL PLAQUE: Fabricate on _____ plaque to comply with requirements indicated below for metal, border style, background texture and finish. Produce castings free from pits, scale and sand holes or other defects. Produce satin polished finish on borders and raised copy by hand tooling and buffing.

METAL: Bronze.

BACKGROUND TEXTURE: Manufacturer's standard pebble texture.

BACKGROUND FINISH: Backed enamel.

METAL FINISHES: Comply With NAAMM "Metal Finishes Manual" for finish designation below and application recommendations.

NATURAL SATIN BRONZE FINISH: NAAMM-M31-06x; use manufacturer's clear organic coating.

INSTALLATION:

LOCATE SIGN UNITS and accessories where shown using mounting methods of type described and to comply with manufacture's instructions. Install sign units level, plumb and height indicated.

Mount letters at 1/2" projection distance from wall.

CAST METAL PLAQUE: Mount plaque as follows:
By concealed studs in tapped lugs on back of plaque, set in predrilled holes filled with quick-setting cement.

ROSETTES: Plaque to be furnished with 4-bronze removable rosettes.

CITY OF FREDERICK

APPROVED Stan Aldridge 7-16-99 DATE

BRONZE PLAQUE SPECIFICATIONS

REVISIONS:

DRAWN BY: KAT

SCALE: NONE

M-1a

CAD

NOTES:

1. For Plaque Plan See Detail M–1.

2. For Plaque Specifications See Detail M–1a.

3. Use Helvetica Style Lettering On Plaque.

4. All Lettering To Be Centered On Plaque Except As Noted.

5. Plaque And 4 Removable Rosettes To Be Bronze.

6. Plaque Dimensions Shown On Details M–1 And M–1a Are Standard. However, Plaque Size May Vary To Accommodate Various Layouts With Approval.

CITY OF FREDERICK

Stan Aldridge 7–16–99

APPROVED DATE

BRONZE PLAQUE
GENERAL NOTES

REVISIONS:

DRAWN BY: KAT

SCALE: NONE

M–1b

CAD

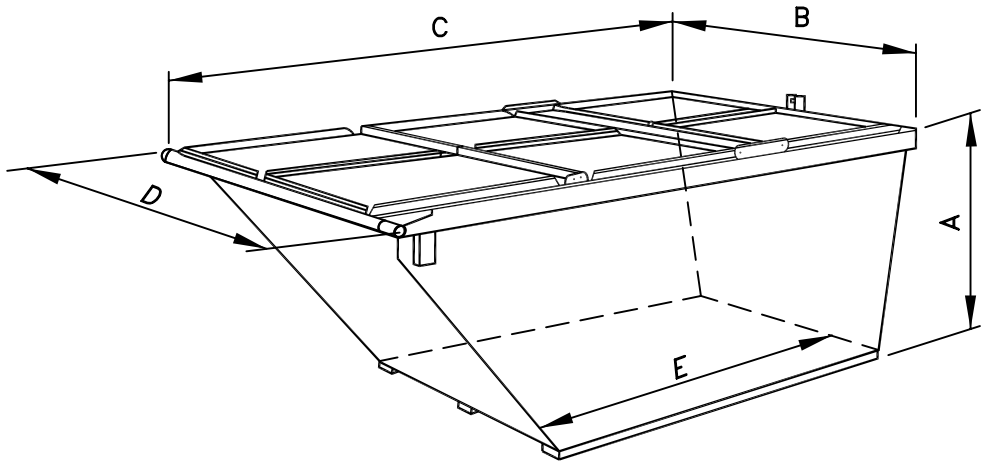

MODELS 401 & 601

DUMPSTER SPECIFICATIONS		
Capacity (Cu. Yds.)	4	6
Walls (Gauge Steel)	12	12
Dimensions (In Inches)		
A (Outside)	49-1/2	49-1/2
B (Outside)	64-1/4	64-1/4
C (Outside)	94-3/8	130-3/8
D (Outside)	77-1/2	77-1/2
E (Outside)	50	84

NOTES:

1. Dumpster Manufactured By AMERI-KAN, One Stoutco Dr., Bristol,Indiana Or Approved Equal. Contact The Superintendent Of Waste Collection And Disposal (Public Works Department) For Consideration Of An Approved Equal.

2. These Dumpster Service Details Apply To Residential Development Only. The City Of Frederick Does Not Service Commercial Dumpsters (Including Apartments).

3. The City Of Frederick Will Provide Residential Dumpster Service Only In Situations Where Each Dwelling Unit Does Not Have Individual Access To The City Right-Of-Way Or Common Driving Lane (e.g., Some Condominium Configurations And Back To Back Townhomes).

4. Dumpster Capacity - Shall Be Ninety (90) Gallons Per Dwelling Unit. For Example, An 8-Unit Condominium Complex Will Require One (1), Four-Cubic-Yard (4 Cu-Yd) Dumpster (i.e., 8 Dwelling Units x 90 Gallons Per Dwelling Unit/202 Gallons Per Cubic-Yard = 3.6 Cubic Yards).

M-2	DRAWN BY: SCALE: NONE	REVISIONS:		DUMPSTER DETAIL	CITY OF FREDERICK APPROVED — 5-22-03 DATE

CAD

NOTES:

1. For Dumpster Enclosure Depressed Curb And Ramp Details See Detail Sheet M–2c.

2. For Dumpster Enclosure General Notes See Detail Sheet M–2d And M–2d Continued.

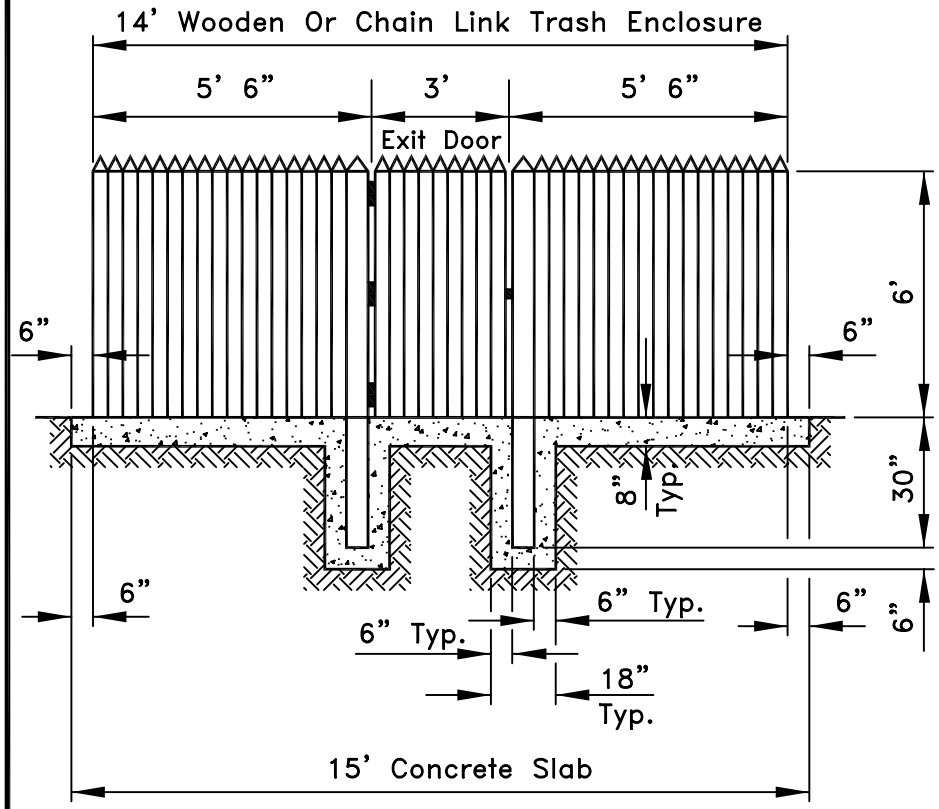

REAR VIEW

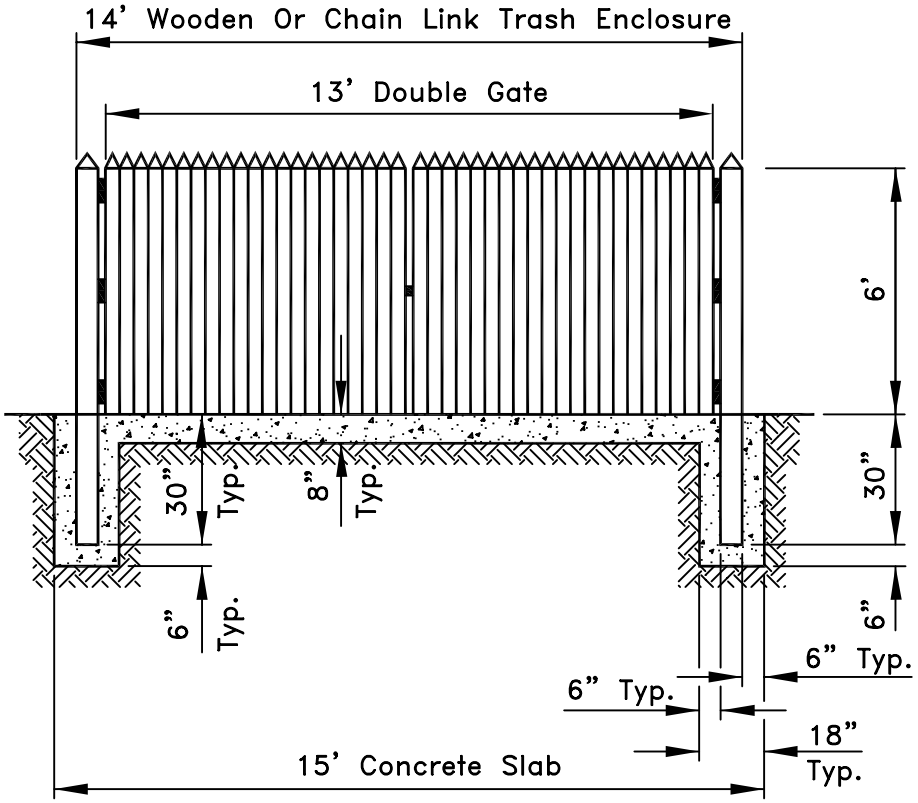

FRONT VIEW

M–2a Sheet 1 Of 3	DRAWN BY: KAT SCALE: NONE	REVISIONS:	DUMPSTER ENCLOSURE (1) 4 OR 6 CUBIC YARD CONTAINER FRONT AND REAR VIEWS	CITY OF FREDERICK APPROVED 5–22–03 DATE

CAD

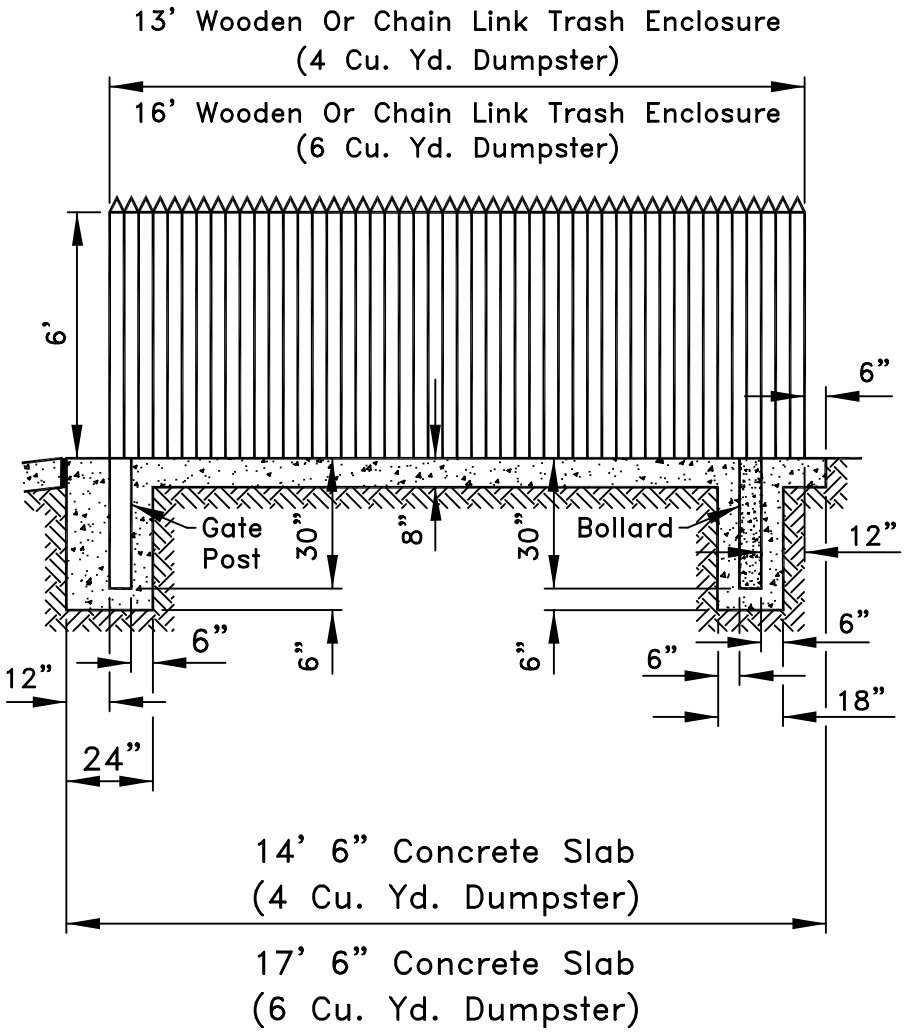

SIDE VIEW

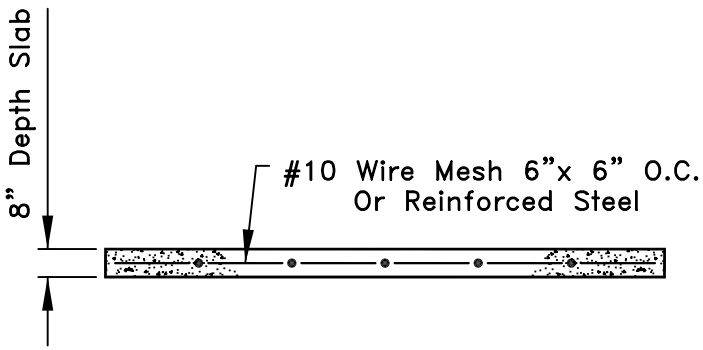

CONCRETE SLAB DETAIL

NOTES:

1. For Dumpster Enclosure Depressed Curb And Ramp Details See Detail Sheet M–2c.
2. For Dumpster Enclosure General Notes See Detail Sheets M–2d And M–2d Continued.

M–2a Continued Sheet 2 Of 3	DRAWN BY: KAT SCALE: NONE	REVISIONS:		DUMPSTER ENCLOSURE (1) 4 OR 6 CUBIC YARD CONTAINER SIDE VIEW AND CONCRETE SLAB	CITY OF FREDERICK APPROVED 5–22–03 DATE

CAD

NOTES:

1. For Dumpster Enclosure Depressed Curb And Ramp Details See Detail Sheet M–2c.

2. For Dumpster Enclosure General Notes See Detail Sheets M–2d And M–2d Continued.

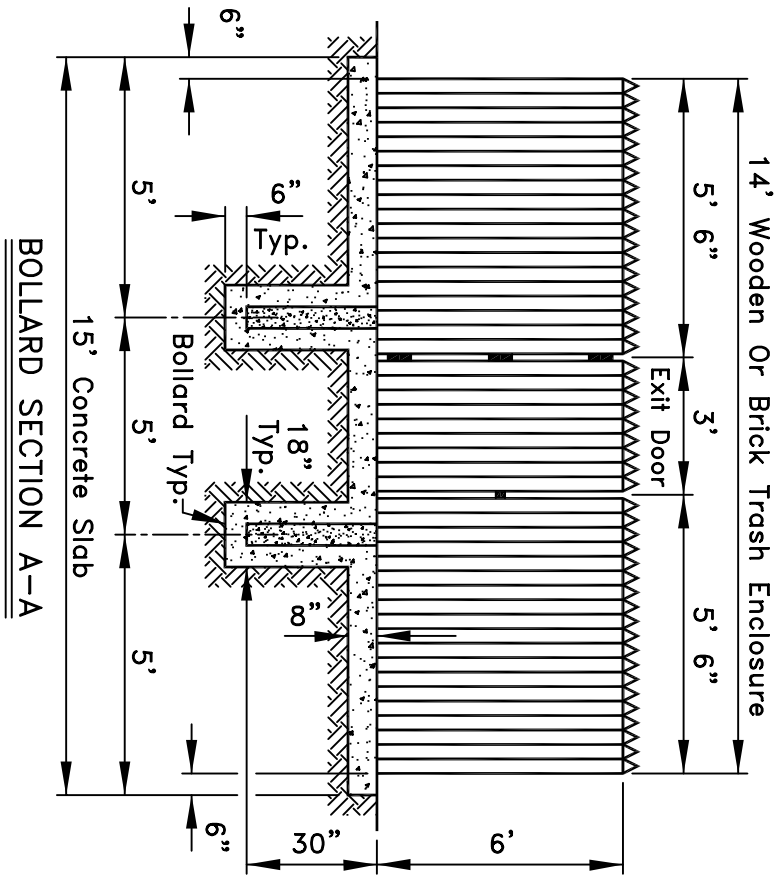

BOLLARD SECTION A–A

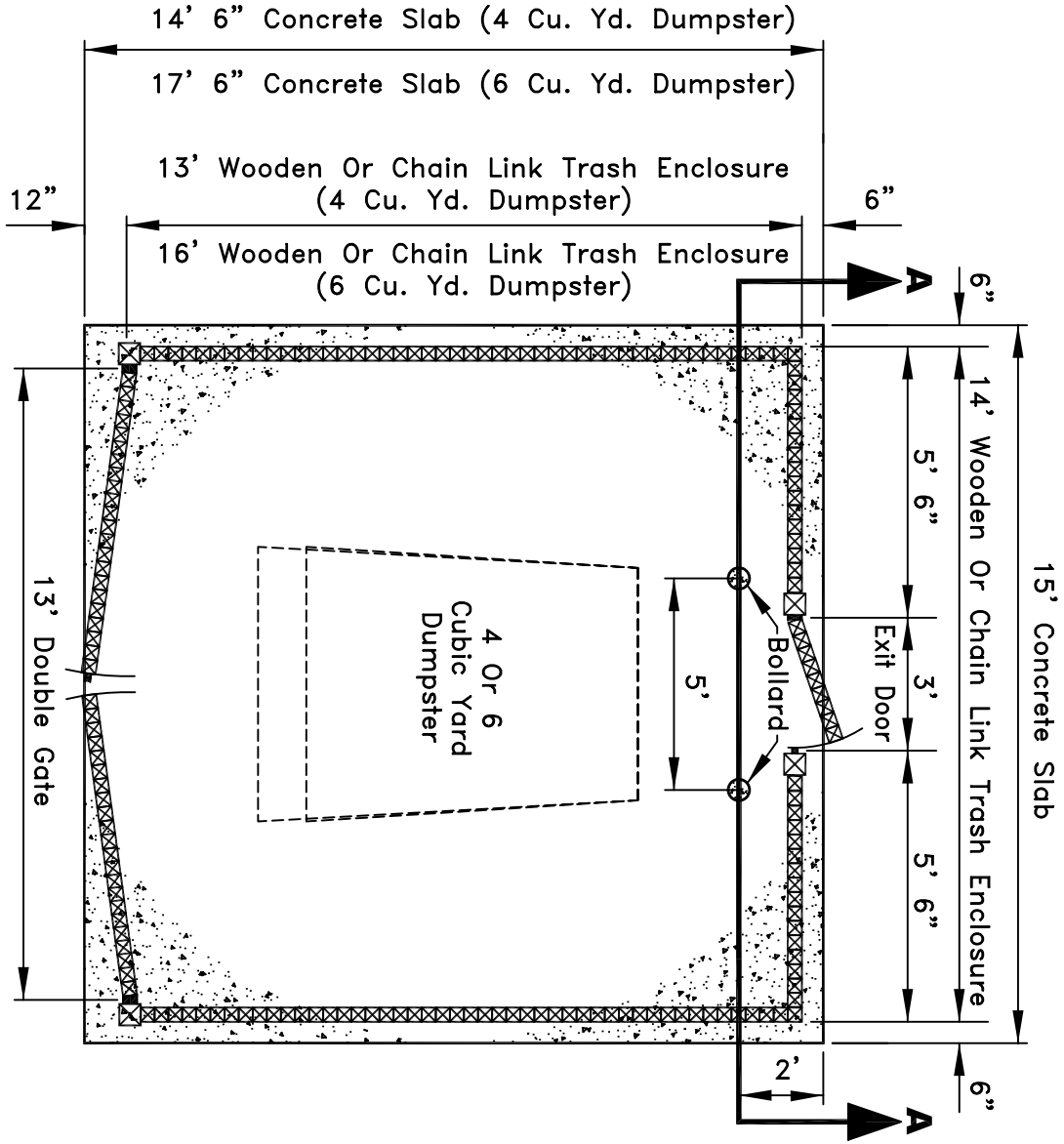

TOP VIEW

M–2a Continued Sheet 3 Of 3	DRAWN BY: KAT SCALE: NONE	REVISIONS:	DUMPSTER ENCLOSURE (1) 4 OR 6 CUBIC YARD CONTAINER TOP AND SECTION VIEWS	CITY OF FREDERICK APPROVED 5–22–03 DATE

CAD

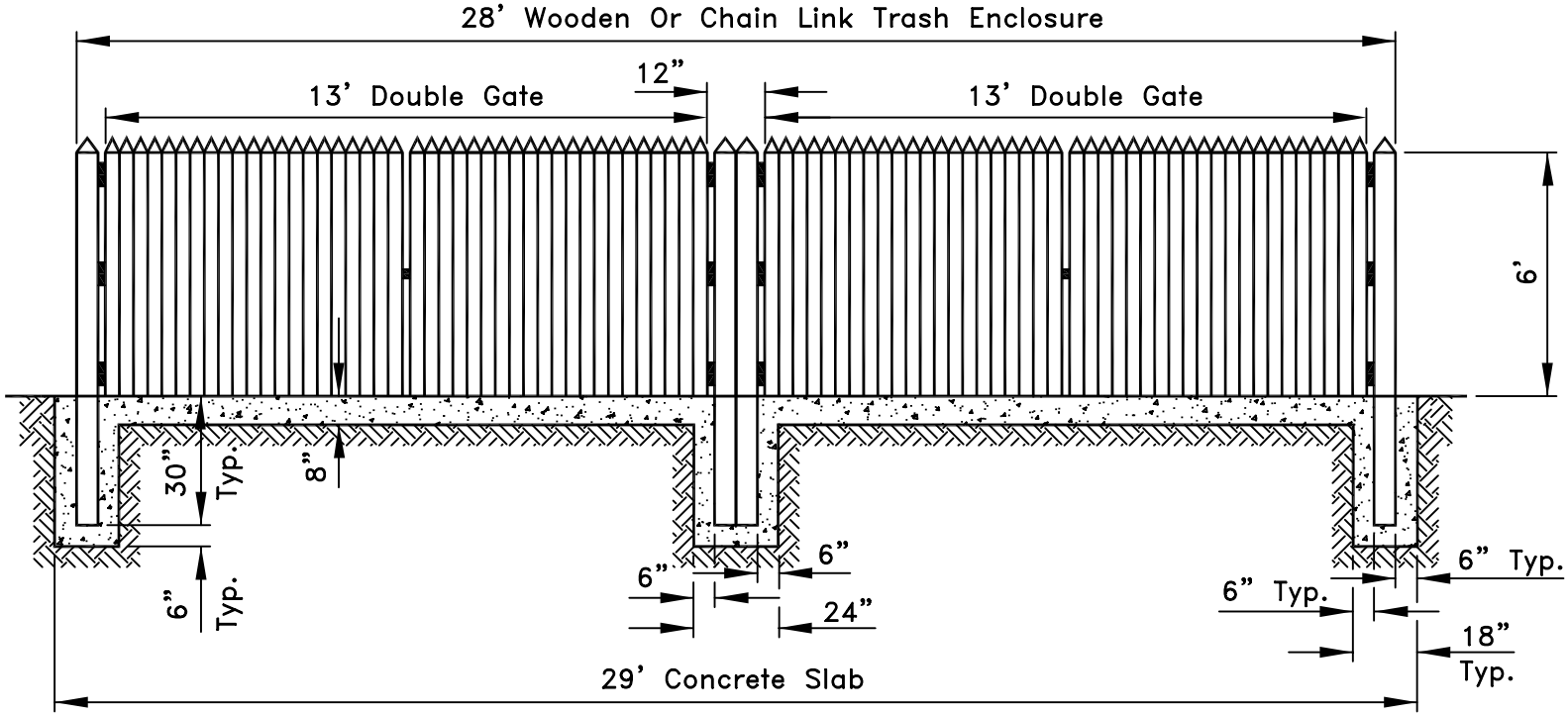

FRONT VIEW

NOTES:

1. For Dumpster Enclosure Depressed Curb And Ramp Details See Detail Sheet M–2c.

2. For Dumpster Enclosure General Notes See Detail Sheets M–2d And M–2d Continued.

M–2b Sheet 1 Of 4	DRAWN BY: KAT SCALE: NONE	REVISIONS:		DUMPSTER ENCLOSURE (2) 4 OR 6 CUBIC YARD CONTAINERS FRONT VIEW	CITY OF FREDERICK APPROVED 5–22–03 DATE

CAD

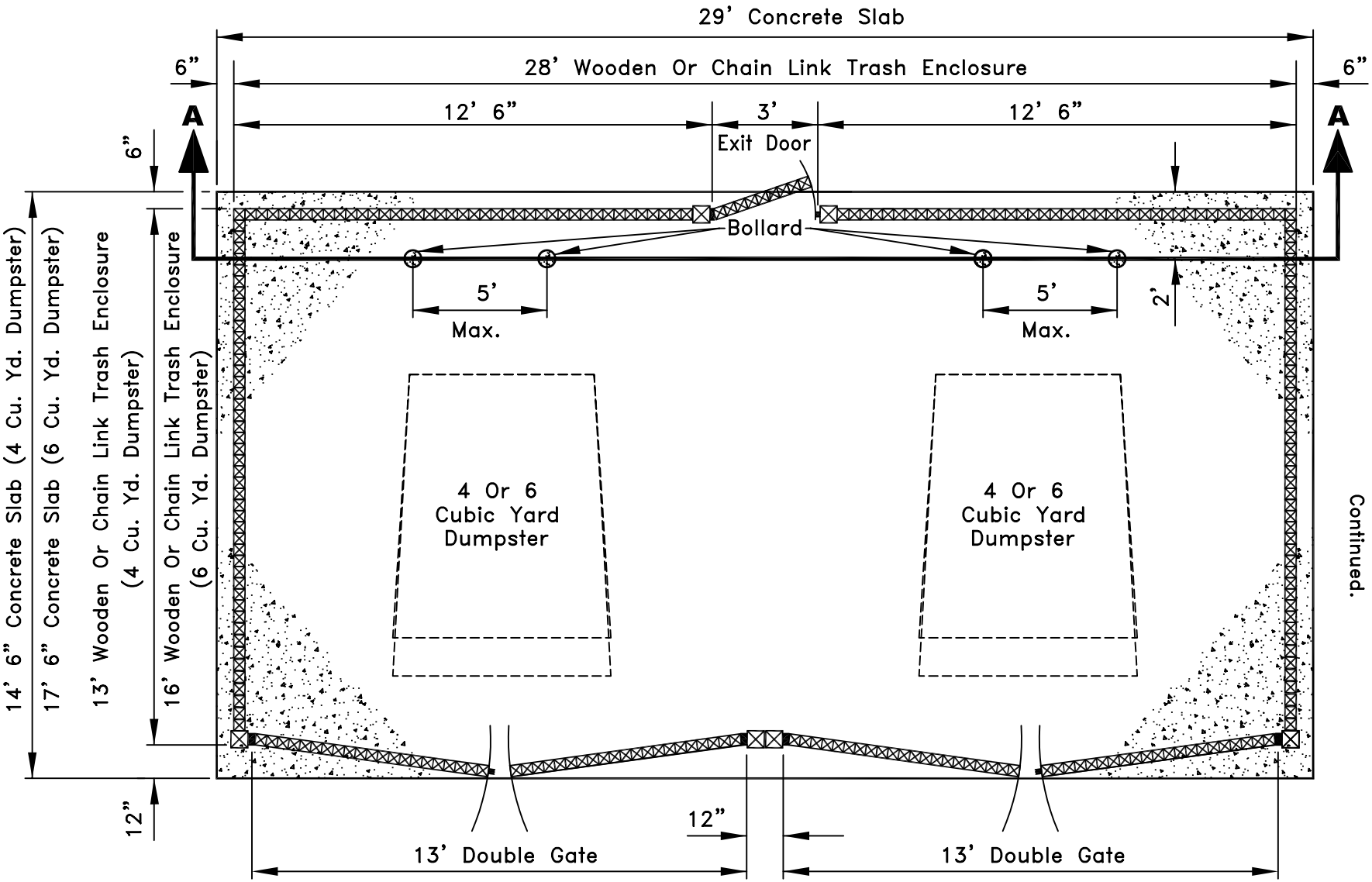

TOP VIEW

NOTES:

1. For Dumpster Enclosure Depressed Curb And Ramp Details See Detail Sheet M-2c.
2. For Dumpster Enclosure General Notes See Detail Sheets M-2d And M-2d Continued.
3. For Bollard Section A-A See Detail Sheet M-2b Continued Sheet 3 Of 4.

M-2b Continued Sheet 2 Of 4	DRAWN BY: KAT SCALE: NONE	REVISIONS:	DUMPSTER ENCLOSURE (2) 4 OR 6 CUBIC YARD CONTAINERS TOP VIEW	CITY OF FREDERICK APPROVED	5-22-03 DATE

CAD

NOTES:

1. For Dumpster Enclosure Depressed Curb And Ramp Details See Detail Sheet M–2c.
2. For Dumpster Enclosure General Notes See Detail Sheets M–2d And M–2d Continued.
3. For Bollard Section Plan View See Detail Sheet M–2b Continued Sheet 2 Of 4.

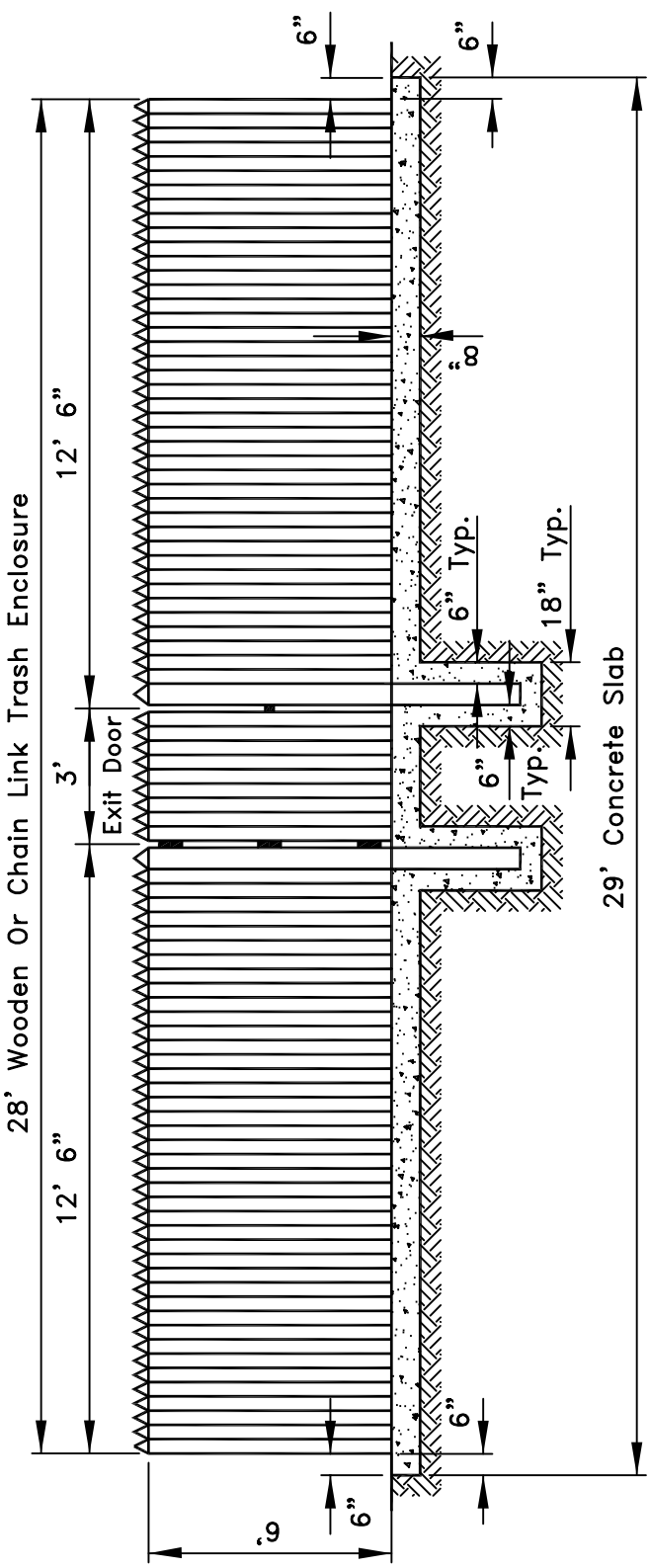

REAR VIEW

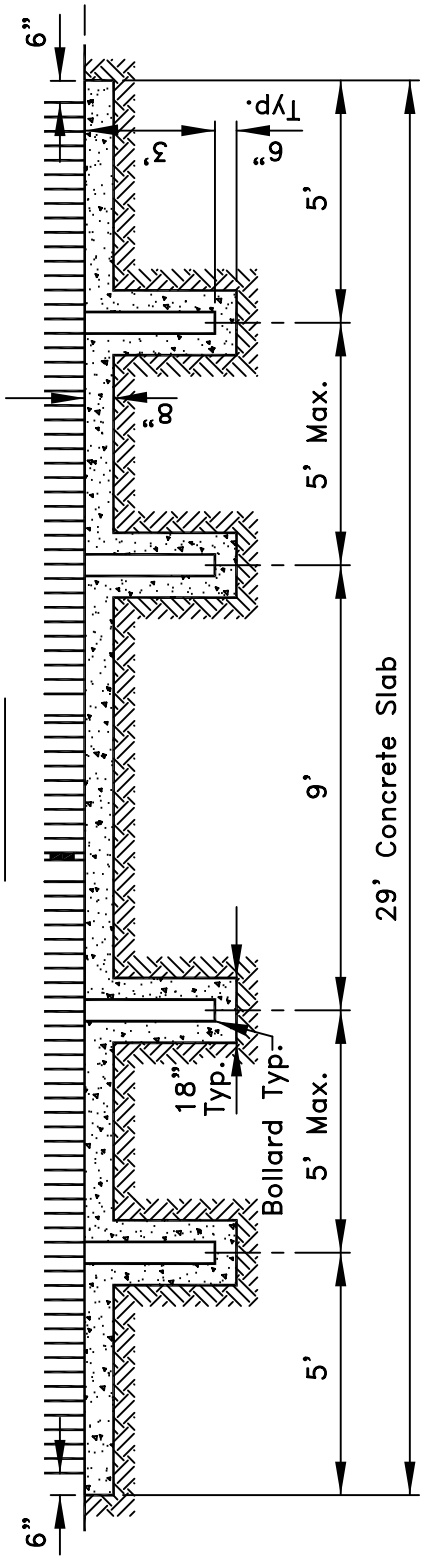

BOLLARD SECTION A–A

CITY OF FREDERICK

APPROVED

5-22-03
DATE

DUMPSTER ENCLOSURE
(2) 4 OR 6 CUBIC YARD
CONTAINERS
REAR VIEW AND BOLLARD SECTION

REVISIONS:

DRAWN BY: KAT

SCALE: NONE

M–2b
Continued
Sheet 3 Of 4

CAD

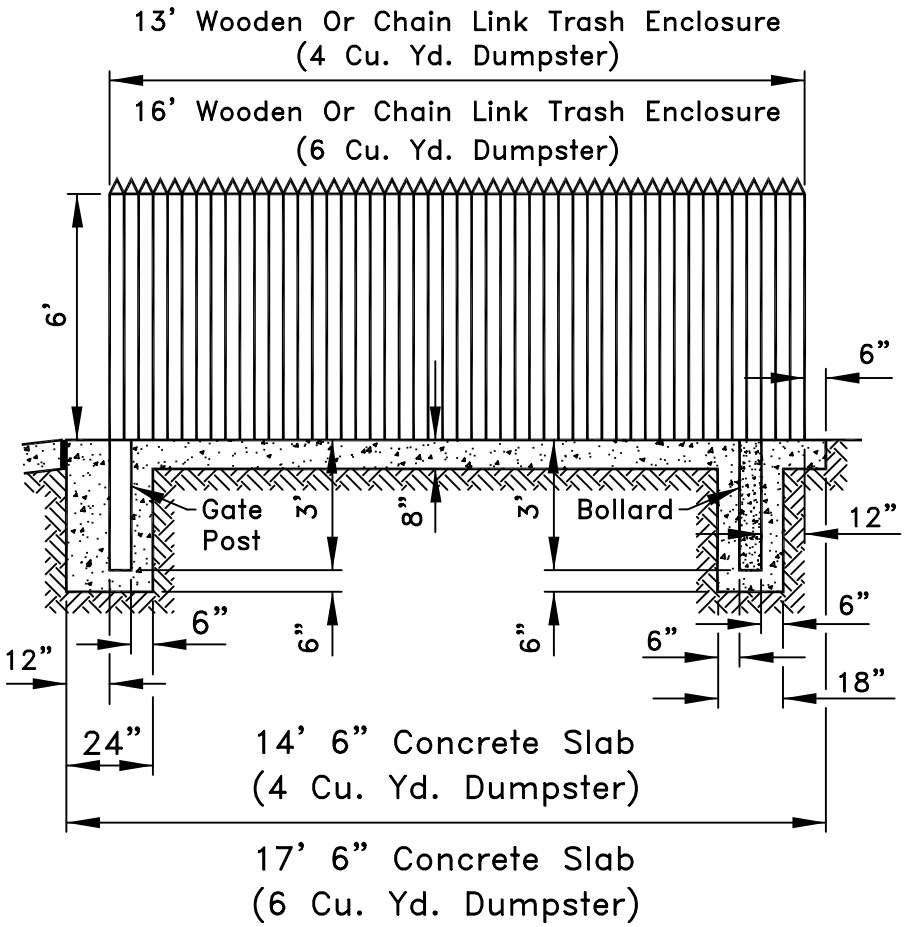

SIDE VIEW

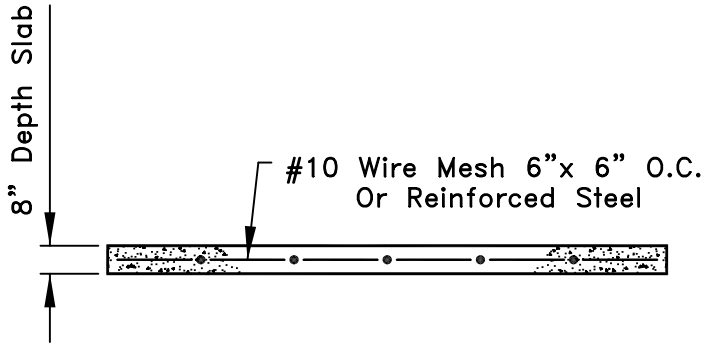

CONCRETE SLAB DETAIL

NOTES:

1. For Dumpster Enclosure Depressed Curb And Ramp Details See Detail Sheet M–2c.
2. For Dumpster Enclosure General Notes See Detail Sheets M–2d And M–2d Continued.

M–2b Continued Sheet 4 Of 4	DRAWN BY: KAT SCALE: NONE	REVISIONS:		DUMPSTER ENCLOSURE (2) 4 OR 6 CUBIC YARD CONTAINERS SIDE VIEW AND CONCRETE SLAB	CITY OF FREDERICK APPROVED 5–22–03 DATE

CAD

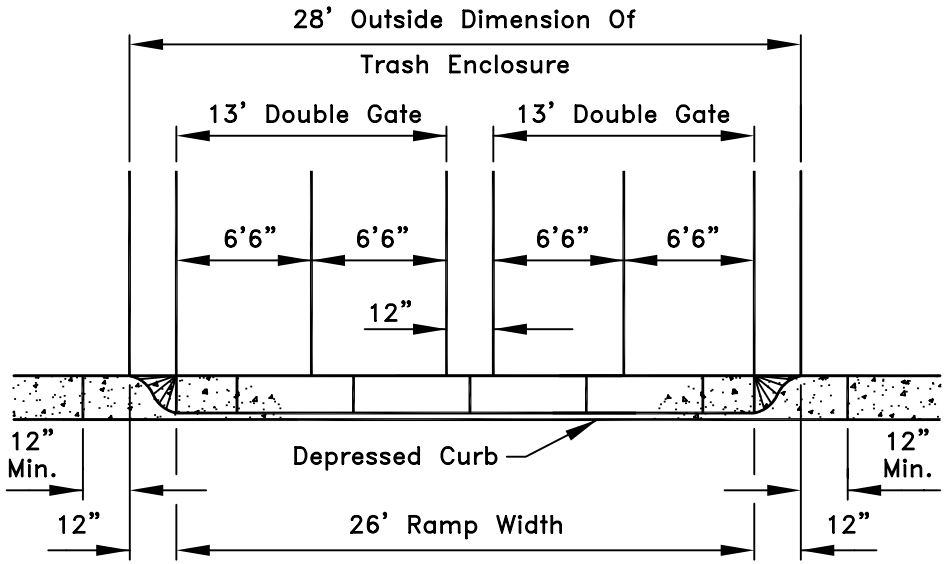

FRONT VIEW FOR DOUBLE CONTAINER ENCLOSURE

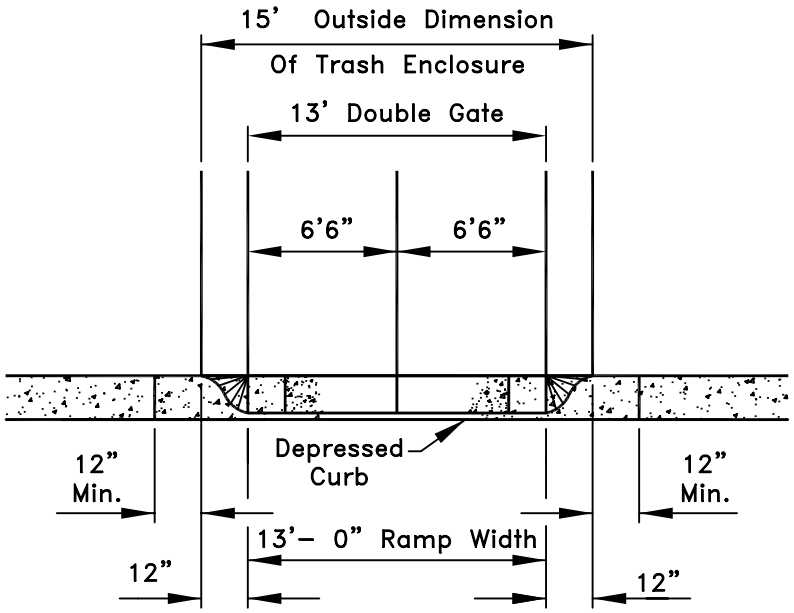

FRONT VIEW

FOR SINGLE CONTAINER ENCLOSURE

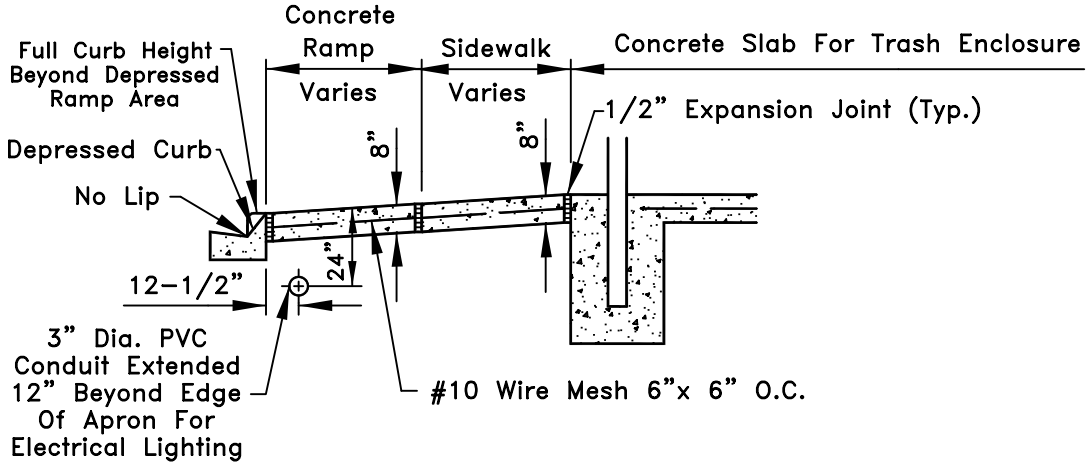

SIDE VIEW

NOTES:

1. For Dumpster Enclosure General Notes See Detail Sheets M-2d & M-2d Continued.

M-2c	DRAWN BY: KAT SCALE: NONE	REVISIONS:		DUMPSTER ENCLOSURE DEPRESSED CURB AND RAMP DETAILS	CITY OF FREDERICK APPROVED 5-22-03 DATE

CAD

1. LOCATION

Before Construction, The Property Owner Or Contractor Shall Contact The Superintendent Of Waste Collection And Disposal To Verify Enclosure Location. Phone: 301-694-1377.

The Location And Arrangement Of Enclosure Must Allow For Safe Maneuvering Of The Trash Collection Vehicle.

TRUCK PARAMETERS:
Length = 37 Ft.
Width = 8 Ft.
Minimum Turning Radius = 52 Ft.

2. CONCRETE PAD

- Minimum 4 Inches Of Stone Base; Minimum 8-Inch Slab With #10 Wire Mesh 6"x 6" O.C.
- Class MSHA Mix No. 2 Concrete; Sprayed With Liquid Curing Compound
- Score 1/4-Inch Dummy Contraction Joints At 4'-0" Intervals
- Construct 1/2-Inch Bituminous Expansion Joints At 20'-0" Intervals (Maximum)

3. DEPRESSED CURB AND RAMP

- Curb And Sidewalk In Front Of Double Gate Shall Be Depressed To Allow The Trash Packer To Back Up To The Trash Enclosure
- In Areas Were No Concrete Curb Or Sidewalk Exists, A Concrete Ramp Shall Be Constructed And Sloped Down From The Trash Enclosure Concrete Slab To Meet The Existing Pavement
- In The Case Of Brick Sidewalks, The Requirement For A Sloped Concrete Ramp Is Still Pertinent

4. GATES

- Gate Posts (Double Gate) - 18 lb Minimum I-Beam, Or Concrete-Filled 6" (1/4-Inch Wall) Steel Pipe.
- Gate Posts (Exit Door) - 6"x 6" Pressure Treated, Or Equivalent In Other Materials; Anchored In Concrete
- All Gates Open Out. All Gates Shall Be Reinforced So As To Minimize Sag
- Double Gates Must Have Means For Securing Them In The Open And Closed Position

CITY OF FREDERICK
APPROVED
5-22-03
DATE

DUMPSTER ENCLOSURE
GENERAL NOTES

REVISIONS:

DRAWN BY: KAT
SCALE: NONE

M-2d
Sheet 1 Of 2

CAD

5. WALLS

- Wooden Enclosure – Pressure Treated Materials. Posts To Be 4"x 4" (Minimum). Surface Mounted To Concrete With Use Of A Galvanized Post–Boot
- Chain Link Enclosure – All Frame Material Shall Be Sch. 40 LCX. Corner Posts Shall Be 3" Diameter. Top Rail And Fill–Ins Shall Be 1–5/8" Diameter. Gate Frame Shall Be 2" Bottom And Sides With 1–5/8" Fill–In. Fence Shall Be 9 Ga. Vinyl Fabric With 9 Ga. Vinyl Wire At Bottom For Strength. Vinyl Fabric Shall Be Sleeved With PVP Plastic Vinyl Slats

6. BOLLARDS

Provide Bollards Along The Rear Wall In Front Of Rear Exit (See Detail Sheets M–2a and M–2b). Shall Be Concrete–Filled Pipe (6"x 1/4" Wall, Minimum, 36" Below Grade In A Minimum Of 18" Diameter Concrete.

7. ILLUMINATION

The Enclosure Area Must Be Illuminated To IESNA Standards For Public Use. The Enclosure Does Not Necessarily Require Separate Lighting; Illumination Can Be Provided By Ambient Lighting, If Adequate

CITY OF FREDERICK

APPROVED

5–22–03
DATE

DUMPSTER ENCLOSURE
GENERAL NOTES

REVISIONS:

DRAWN BY: KAT
SCALE: NONE

M–2d
Continued
Sheet 2 Of 2

CAD

OPEN

M-3	DRAWN BY: SCALE: NONE	REVISIONS:			CITY OF FREDERICK APPROVED DATE

CAD

OPEN

M–3a	DRAWN BY: SCALE: NONE	REVISIONS:			CITY OF FREDERICK APPROVED DATE

CAD

OPEN

M-3a Continued Sheet 1 Of 2	DRAWN BY: SCALE: NONE	REVISIONS:			CITY OF FREDERICK APPROVED DATE

CAD

OPEN

M-3a Continued Sheet 2 Of 2	DRAWN BY: SCALE: NONE	REVISIONS:			CITY OF FREDERICK APPROVED DATE

CAD

OPEN

M-3b Continued	DRAWN BY: SCALE: NONE	REVISIONS:			CITY OF FREDERICK APPROVED DATE

CAD

OPEN

M-3b	DRAWN BY: SCALE: NONE	REVISIONS:			CITY OF FREDERICK APPROVED DATE

CAD

OPEN

M-3c	DRAWN BY: SCALE: NONE	REVISIONS:			CITY OF FREDERICK APPROVED DATE

CAD

OPEN

M-3c Continued	DRAWN BY: SCALE: NONE	REVISIONS:			CITY OF FREDERICK APPROVED DATE

CAD

OPEN

M-3 Continued Sheet 1 Of 2	DRAWN BY: SCALE: NONE	REVISIONS:			CITY OF FREDERICK APPROVED DATE

CAD

OPEN

M-3 Continued Sheet 2 Of 2	DRAWN BY: SCALE: NONE	REVISIONS:			CITY OF FREDERICK APPROVED DATE

CAD

OPEN

M-3d	DRAWN BY: SCALE: NONE	REVISIONS:			CITY OF FREDERICK APPROVED DATE

CAD

OPEN

M-3e	DRAWN BY: SCALE: NONE	REVISIONS:			CITY OF FREDERICK APPROVED DATE

CAD

OPEN

M-3f	DRAWN BY: SCALE: NONE	REVISIONS:			CITY OF FREDERICK APPROVED DATE

CAD

OPEN

M–3g	DRAWN BY: SCALE: NONE	REVISIONS:			CITY OF FREDERICK APPROVED DATE

CAD

OPEN

M-3h	DRAWN BY: SCALE: NONE	REVISIONS:			CITY OF FREDERICK APPROVED DATE

CAD

OPEN

M-3c Continued Sheet 1 Of 2	DRAWN BY: SCALE: NONE	REVISIONS:			CITY OF FREDERICK APPROVED DATE

CAD

OPEN

M-3h Continued Sheet 2 Of 2	DRAWN BY: SCALE: NONE	REVISIONS:			CITY OF FREDERICK APPROVED DATE

CAD

OPEN

M-3i	DRAWN BY: SCALE: NONE	REVISIONS:			CITY OF FREDERICK APPROVED DATE

CAD

OPEN

M-3i Continued	DRAWN BY: SCALE: NONE	REVISIONS:			CITY OF FREDERICK APPROVED DATE

CAD

OPEN

M–3j	DRAWN BY: SCALE: NONE	REVISIONS:			CITY OF FREDERICK APPROVED DATE

CAD

OPEN

M-3k	DRAWN BY: SCALE: NONE	REVISIONS:			CITY OF FREDERICK APPROVED DATE

CAD

OPEN

M-3k Continued	DRAWN BY: SCALE: NONE	REVISIONS:			CITY OF FREDERICK APPROVED DATE

CAD

OPEN

M-3L Continued	DRAWN BY: SCALE: NONE	REVISIONS:			CITY OF FREDERICK APPROVED DATE

CAD

OPEN

M-3L	DRAWN BY: SCALE: NONE	REVISIONS:			CITY OF FREDERICK APPROVED DATE

CAD

OPEN

M-3m	DRAWN BY: SCALE: NONE	REVISIONS:			CITY OF FREDERICK APPROVED DATE

CAD

OPEN

M-3n	DRAWN BY: SCALE: NONE	REVISIONS:			CITY OF FREDERICK APPROVED DATE

CAD

OPEN

M-3n Continued	DRAWN BY: SCALE: NONE	REVISIONS:			CITY OF FREDERICK APPROVED DATE

CAD

OPEN

M-3o	DRAWN BY: SCALE: NONE	REVISIONS:			CITY OF FREDERICK APPROVED DATE

CAD

OPEN

M-3n Continued	DRAWN BY: SCALE: NONE	REVISIONS:			CITY OF FREDERICK APPROVED DATE

CAD

OPEN

M–3p	DRAWN BY: SCALE: NONE	REVISIONS:			CITY OF FREDERICK APPROVED DATE

CAD

OPEN

M-3q	DRAWN BY: SCALE: NONE	REVISIONS:			CITY OF FREDERICK APPROVED DATE

CAD

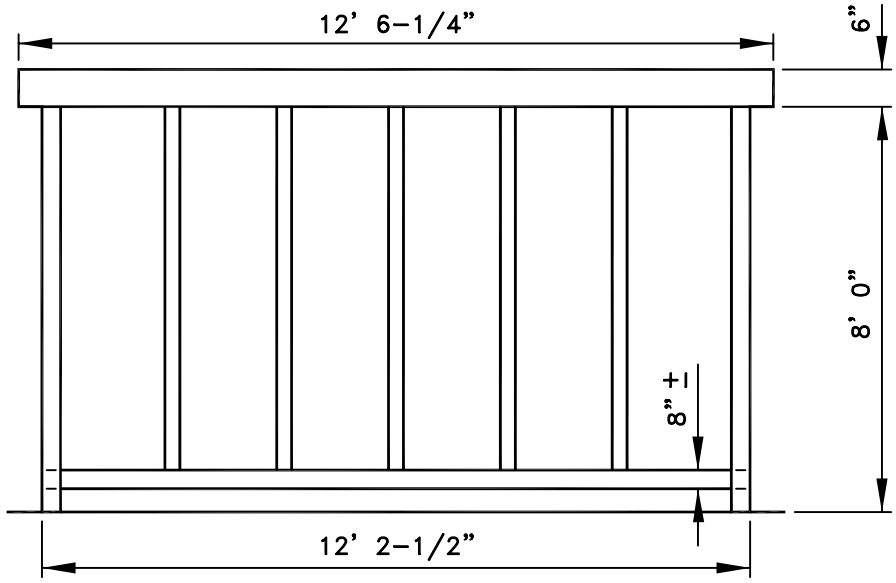

REAR ELEVATION

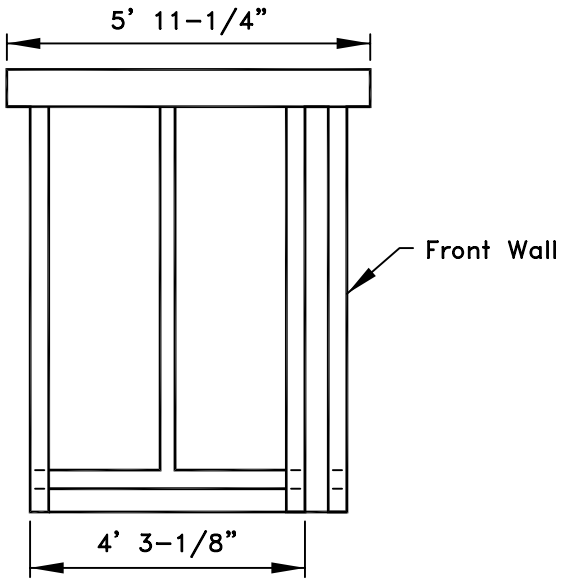

SIDE ELEVATION

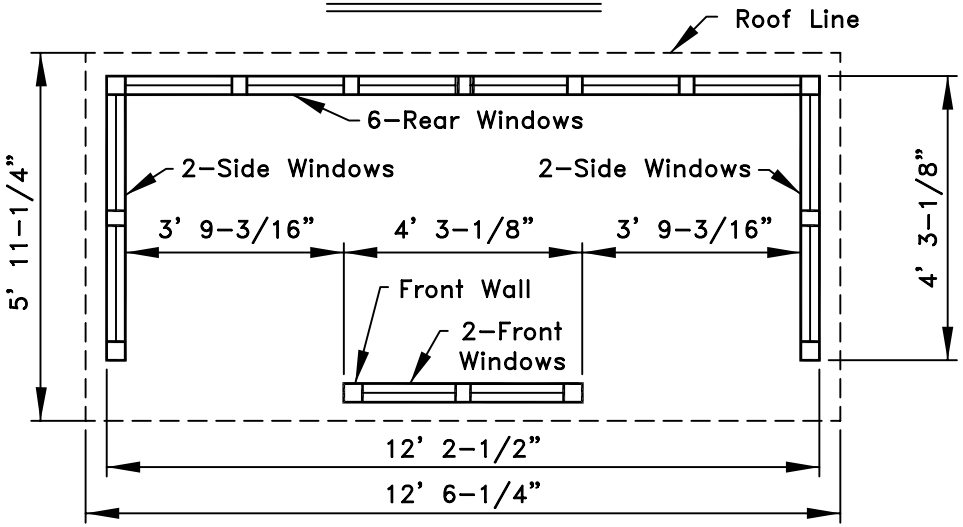

PLAN

NOTES:

1. Bus Shelter Manufactured By The Columbia Equipment Company, Inc., Jamaica, New York Or Approved Equal.

M-4	DRAWN BY: KAT SCALE: NONE	REVISIONS:		BUS SHELTER PLAN & ELEVATIONS	CITY OF FREDERICK Stan Aldridge APPROVED 7-16-99 DATE

CAD

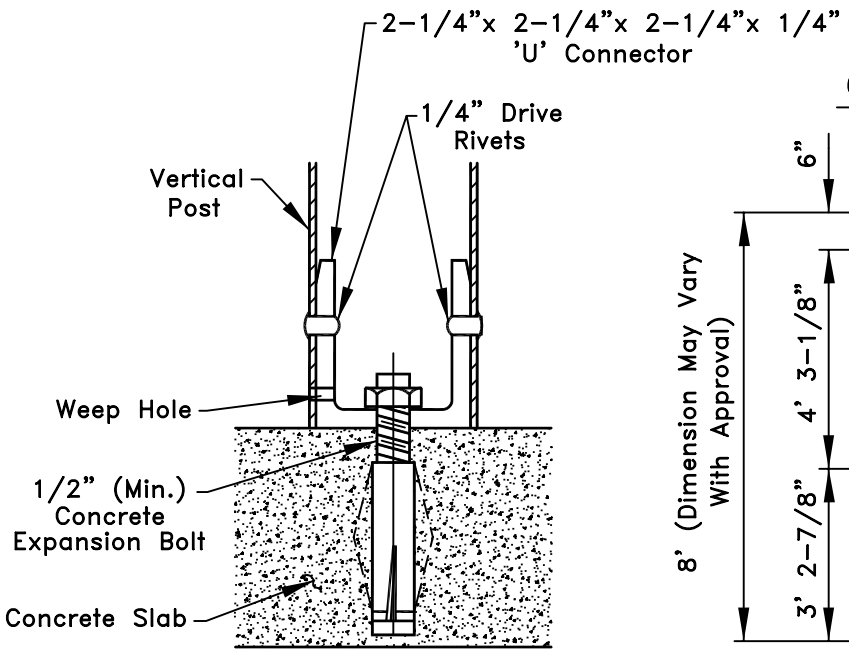

CORNER POST
ANCHOR DETAIL

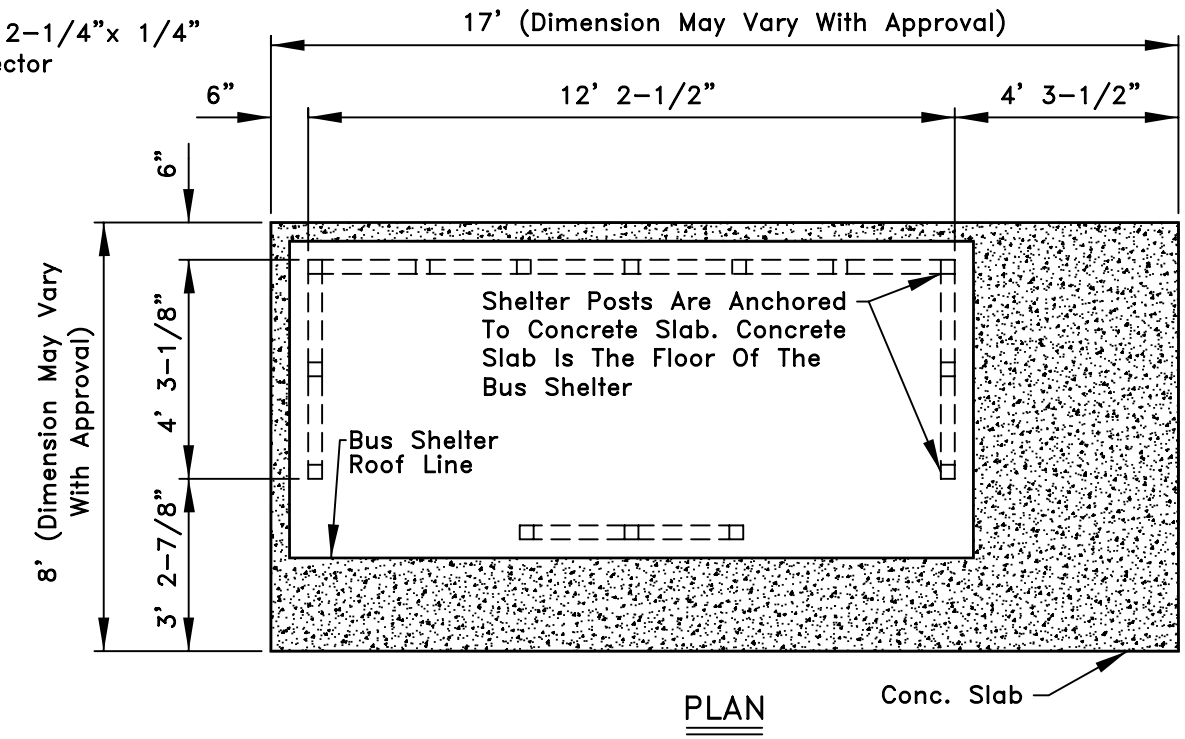

PLAN

NOTES:

1. Anchor Materials Manufactured By The Columbia Equipment Company, Inc., Jamaica, New York Or Approved Equal.
2. Place 1/2" Expansion Joint Material Where Concrete Bus Shelter Slab Abuts Another Concrete Surface.
3. Place 4" Gravel For Concrete Slab On Prepared Subgrade. Subgrade To Be Compacted To 95% Modified Proctor.

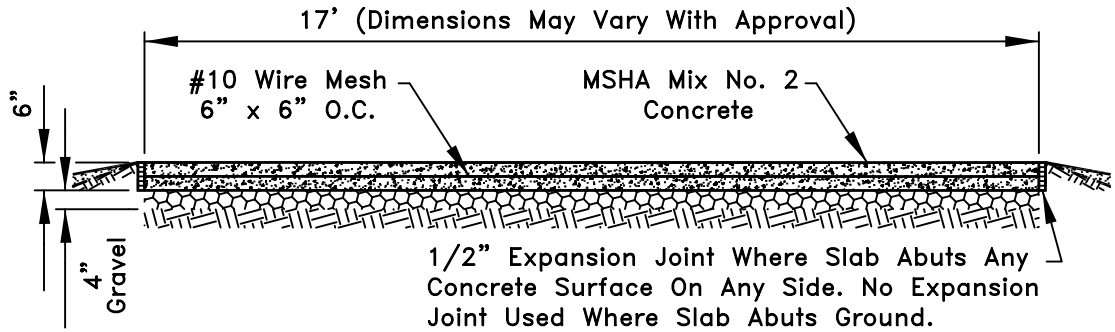

SIDE ELEVATION

M-4c	DRAWN BY: KAT SCALE: NONE	REVISIONS:		BUS SHELTER CONCRETE SLAB AND ANCHOR DETAILS	CITY OF FREDERICK Stan Aldridge APPROVED 7-16-99 DATE

CAD

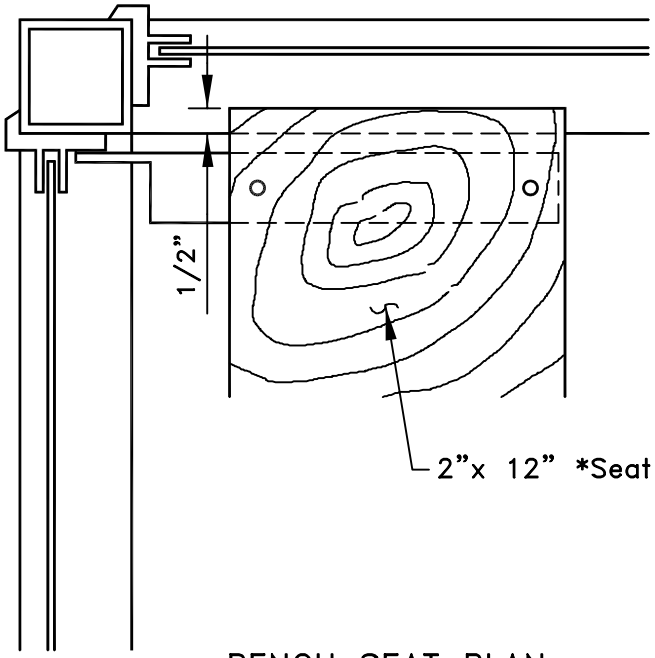

BENCH SEAT PLAN

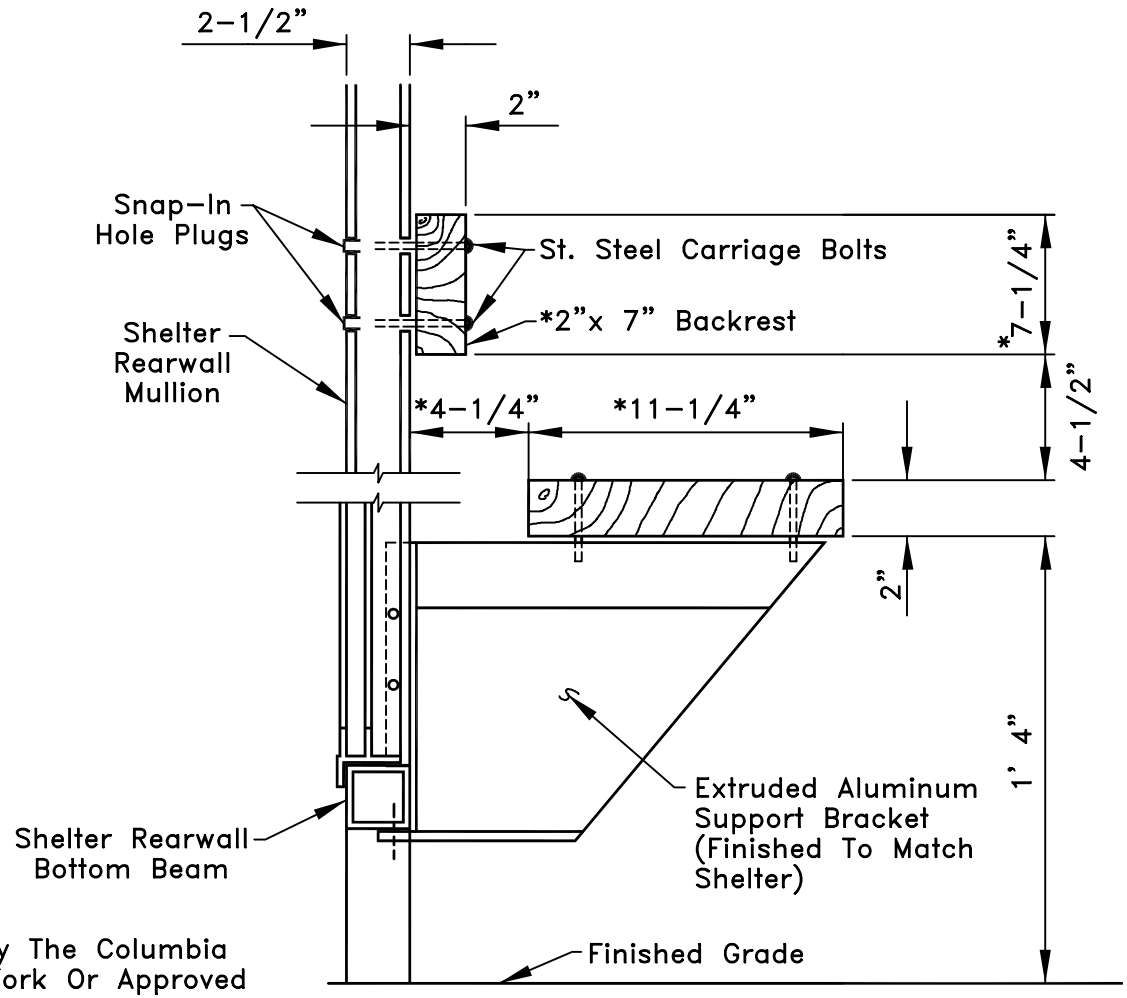

BENCH SEAT AND BACKREST SECTION

NOTES:

1. Wood Bench And Backrest Manufactured By The Columbia Equipment Company, Inc., Jamaica, New York Or Approved Equal.
2. * Wood Dimensions Are Nominal.
3. Wood To Be Kiln Dried Laminated Oak With Polyurethane Finish.

M-4d	DRAWN BY: KAT SCALE: NONE	REVISIONS:		BUS SHELTER WOOD BENCH AND BACKREST PLAN AND SECTION	CITY OF FREDERICK Stan Aldridge APPROVED 7-16-99 DATE

CAD

NOTES:

1. Litter Receptacle Model No. H–1Manufactured By The Columbia Equipment Company, Inc., Jamaica, New York Or Approved Equal.

2. Equipped With A Vandal Resistant Key Operated Locking Mechanism Which Releases The Receptacle Instantly For Easy Maintenance.

3. SPECIFICATIONS:
   Materials – Heavy Duty 16 Gauge Perforated Steel
   Dimensions – 24" High x 12" Diameter
   Color – Architectural Bronze
   Capacity – 10 Gallon

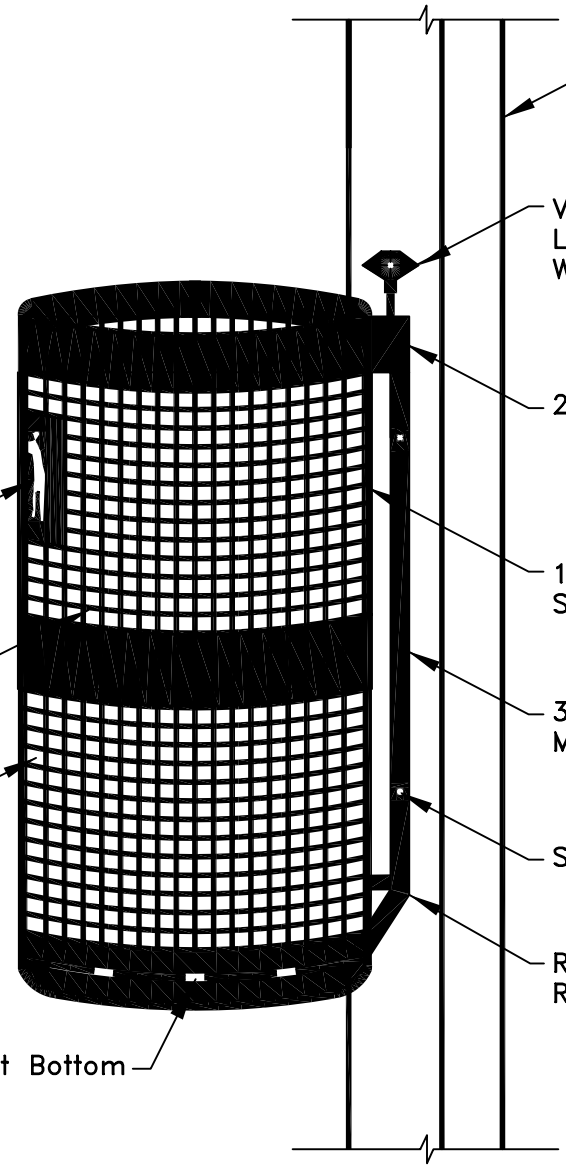

M–4e	DRAWN BY: KAT SCALE: NONE	REVISIONS:		BUS SHELTER LITTER RECEPTACLE	CITY OF FREDERICK Stan Aldridge 7-16-99 APPROVED DATE

CAD

SPECIFICATIONS:

GENERAL: All Bus Shelters Shall Be 8005 sD As Manufactured Bt The Columbia Equipment Company, Inc., Jamaica, New York Or Approved Equal. Dimensions Shall Be: 12' 6-1/4" Minimum Overall Length (Outside Of Facia To Outside Of Facia) By 5' 11-1/4" Minimum Overall Width (Outside Of Facia To Outside Of Facia) By 8' 0" High To Underside Of Facia. Shelters Shall Be Non-Cantilevered. Shelters Shall Have A Front Windscreen.

CONSTRUCTION MATERIALS: All Structural Frame And Window Frame Members Shall Be Extruded Aluminum Of 6061-T6 Or 6063-T52 (For Duranodic) Alloy. Structural Framing Shall Be One Piece Seamless 2-1/2"x 2-1/2" Hollow Aluminum Tubes Of .125" Minimum Thickness. Snap-Together Or Two-Piece Channels Will Not Be Accepted. Mullions Shall Be One-Piece Seamless 1-1/2"x 2-1/2"x .125" Members. Window Frames Shall Be Separate Extruded Aluminum Members With Integral Self-Alignment Lips And Corner Key Slots. Frameless Glazing In Recessed Pockets Will Not Be Accepted. Snap-On Glazing Stops Or Storefront Glazing Details Will Not Be Accepted. Facias Shall Be One-Piece Seamless Extruded Aluminum Sections Of .125" Thickness With Integral Gutter, Raindrip Molding, Weep Holes - Cantilevered Beyond Face Of Glazing Panels Below Double Corner Key Slots And Alignment Lip. Shelters Shall Be Prefabricated In Four Or Five Sections, Completely Glazed (So That Total Erection Time At Site Requires Only About One Hour). Flat Roofs Shall Be One-Piece Completely Prefabricated Units. All Joints Shall Be Neat And Clean And All Edges Shall Be Free Of Burrs.

STANDARDS: All Aluminum Shall Conform To The Standards Of The Aluminum Association, 750 3rd Avenue, New York, New York. Standards Complied With In The Design And Construction Of Shelters Include AISC, Aluminum Association, ASTM, UL, Etc., As Applicable To The Aluminum, Steel, Plastics And Other Parts. Shelter Construction Shall Conform To Construction Standards Of ASCE, Shelters Are Designed To Withstand Dead Loads Of 40 PSF Minimum And Wind Load Over 75 MPH.

STRUCTURAL FRAMING: All Framing, Both Vertical And Horizontal, Shall Be The Same Size. Minimum Size Shall Be 2-1/2"x 2-1/2"x 1/8" Structural Tubes. Mullions Shall Be Concealed. Connections Shall Be By Means Of 1/4" Thick Minimum Extruded Aluminum Channels, 2-1/4",x 2-1/4"x 2-1/4" High With Tapered Edges Or 1-1/4"x 2-1/4"x 2-1/4" High With Tapered Edges. Each Main Structural Joint Shall Be Fastened With Two High Strength Stainless Steel Bolts Of 1/4" Each Joint. Self Tapping Connectors Will Not Be Accepted. Base Connections Shall Be Adjustable To Varying Sidewalk Or Mounting Conditions. Base Of Shelter Columns Shall Be Designed To Accept Both Internal And External Base Flanges As Used, They Shall Have Same Anodized Or Duranodic Finish As Shelter. Painted Flanges Will Not Be Accepted With Anodized Or Duranodic Finished Shelters. Shelter Posts Shall Contain Internal Drainage Weep Holes To Prevent Condensation Build-Up.

WINDOW FRAMING: Windows Shall Be Factory Installed In Window Frame Which Shall Be Factory Installed Into The Separate Structural Frame. Window Frames Shall Have Mitered Corners And Shall Be Connected Internally By Extruded Aluminum Corner Keys Or Screw Bosses With Concealed Stainless Steel Screws For Positive Tamper-Proof Fastening. Window Frames Shall Be Affixed To Shelter Frame With 3/16" Shallow Head Aluminum Rivets, At Approximately 13-1/4" O.C. Rivets Shall Be On "Inside Of Shelter". Outside Rivets Will Not Be Acceptable. Rivets Shall Grip Both Surfaces Being Joined Continuously For A Full 360 Degrees. Rivets Fastened Into "Slots" Will Not Be Permitted. Window Frames Shall Be Independent So That Windows With Gasketing (Mounted In Frames) Can Be Removed Or Installed As A Complete Unit Without Affecting Any Other Member Of The Shelters. Fin Tube, Snap-On Or Screw-On Glazing Beads Are Not Avveptable. Where Polycarbonate Windows Are Used, Specially Deep Frames With 1/2" To 3/4" Edge Engagement Shall Be Used To Prevent Windows From Being "Popped-Out". In This Case, Specially Deep Continuous PVC Dry Set Splines Shall Be Used For Gasketing. Design Of Window Framing Shall Be Such That Only Authorized Personnel May Remove Window Units.

CITY OF FREDERICK

APPROVED Stan Aldridge 7-16-99 DATE

BUS SHELTER SPECIFICATIONS

REVISIONS:

DRAWN BY: KAT

SCALE: NONE

M-4f

CAD

SPECIFICATIONS (Continued):

FINISHES: All Aluminum Framing Shall Have A 313 Dark Bronze Duranodic Finish To Conform To "Aluminum Association Standards For Anodically Coated Aluminum Alloys For Architectural Applications". Facias Shall Have A 313 Dark Bronze Duranodic Finish. Duranodic Finishes Shall Conform To The Standards Of The Aluminum Company Of America.

GLAZING: All Glazing Shall Be 1/4" Clear Mar-Resistant Polycarbonate (Margard) Gasketing Around Windows Shall Be Continuous Specially Extruded Polyvinyl Chloride PVC Dry Set Splines. Where Polycarbonate Glazing Is Used, Specially Deep Continuous PVC Dry Set Splines Shall Be Used, As Shall Deep Window Frames. Glazing Shall Be Fully Gasketed And Framed In Independent, Interchangeable Factory Assembled Units For Ease Of Maintenance And Repair. Maximum Glazing Panel Widths Shall Be 21".

ROOF: Roof Shall Be 5/8" Thick Fiberglass Laminated Plywood Snadwich Panel, With Fiberglass On Both Sides. One Side Shall Have A Gel-Coat Finish. Both Sides With White Integral Color. Roof Shall Be Completely Enclosed - Both Top And Bottom - By Continuous, Compressed Gaskets Of Expanded EPT Rubber Or Neoprene SCE 41, With Adhesive Backing And Shall Be Leak And Condensation Proof. All Roof Seams And Joints Between Panel And Aluminum Shall Be Continuously Sealed With Premium Construction Grade Silicone Such As Dow #780 Or GE #1200. Roof Panel Shall Be Factory Mounted Into Facia/Gutter Assembly. Roof Panel Shall Be Removable Without Removing Facia.

ROOF/FACIA: Facia Member Shall Be 6" High Minimum. Facias Shall Be One-Piece Continuous Extruded Members With Mitered Corners; Connection In Facias Shall Be With Two (2) Aluminum Angle Corner Keys And Four (4) Threaded Stainless Steel Allenhead Set Screws At Each Corner. Facia Members Shall Have No Exposed Fastenings Of Any Sort. Joints Shall Be Mechanically Fastened, Not Welded, To Facilitate Future Maintenance. Facia Members Shall Have Integral Self-Aligning Lips For Perfect Alignment. Weep Holes In Facia Shall Be Located On A Custom Basis To Prevent Drainage From Crossing Through Shelter On Sidewalk. Drainage Shall Take Place Through Cantilevered Weep Holes To An External Reveal Inside The Facia But Outside The Shelter, To Prevent Streaking On The Exterior Surface Of The Facia. For Safety, Top Edge Of Facia Shall Be Rounded. Roof Assembly Shall Be Attached To Roof Beams With 1/4" Minimum Diameter Stainless Steel Gasketed Roof Bolts Approximately 13" O.C.

ADDITIONAL: Design Of Shelter Shall Be Such That The Structure Is Stable With All Windows, Roof, Facia And Ground Fastenings Removed. Shelters Shall Be Designed By Registered Architect And Engineered By Licensed Engineers. Shelters Shall Be Vandal-Resistant, Maintenance-Free And Completely Weather-Proof. The Design Shall Permit Integration Of Light Fixture, Bench, Radiant Heater, Transit Map And Schedule Panels, Telephone, Graphic Treatments And Other Integrated Street Furniture. All Installation Hardware And Ground Anchors Shall Be Supplied With Shelter.

BENCH: Shelter Shall Be Furnished With A Full-Length Integrated Furniture-Grade Laminated Oak Bench With Backrest With Eased Edges And 2-Coat Polyurethane Finish. Seat Plank Shall Be 2"x 12" (Nom.) And Backrest Plank 2"x 7" (Nom.). Support Brackets Shall Be Triangular-Shaped Solid Aluminum, Double Channel, One-Piece Extrusions Finished To Match Shelter. Brackets Shall Be Attached To Both Rear And Side Walls Of Shelters With Both Bolts And Rivets. Seats Shall Be Attached To Supports And Backrest Shall Be Attached Directly To Shelter Back Wall With Stainless Steel Carriage Bolts 3/16" Diameter Minimum.

LIGHT: Light Fixture Shall Be A Kendall Model No. 5000 35-Watt Hight Pressure Sodium Light Mounted At The Center Of The Back Wall Top Beam. Wiring Shall Be Hidden Within Shelter Structure And Accessible Through Access Holes With Cover Plates.

CITY OF FREDERICK

APPROVED Stan Aldridge 7-16-99 DATE

BUS SHELTER SPECIFICATIONS

REVISIONS:

DRAWN BY: KAT

SCALE: NONE

M-4g

CAD

SPECIFICATIONS (Continued):

TRASH RECEPTACLE: Trash Receptacle Shall Be A Model H-1, 10 Gallon Cylindrical-Shaped Perforated Steel Container With An Architectural Bronze Finish. Trash Receptacle To Be Mounted On One Post With Tamperproof Hardware And Hinged For Ease In Emptying.

CITY OF FREDERICK

Stan Aldridge 7-16-99

APPROVED DATE

BUS SHELTER SPECIFICATIONS

REVISIONS:

DRAWN BY: KAT

SCALE: NONE

M-4h

CAD

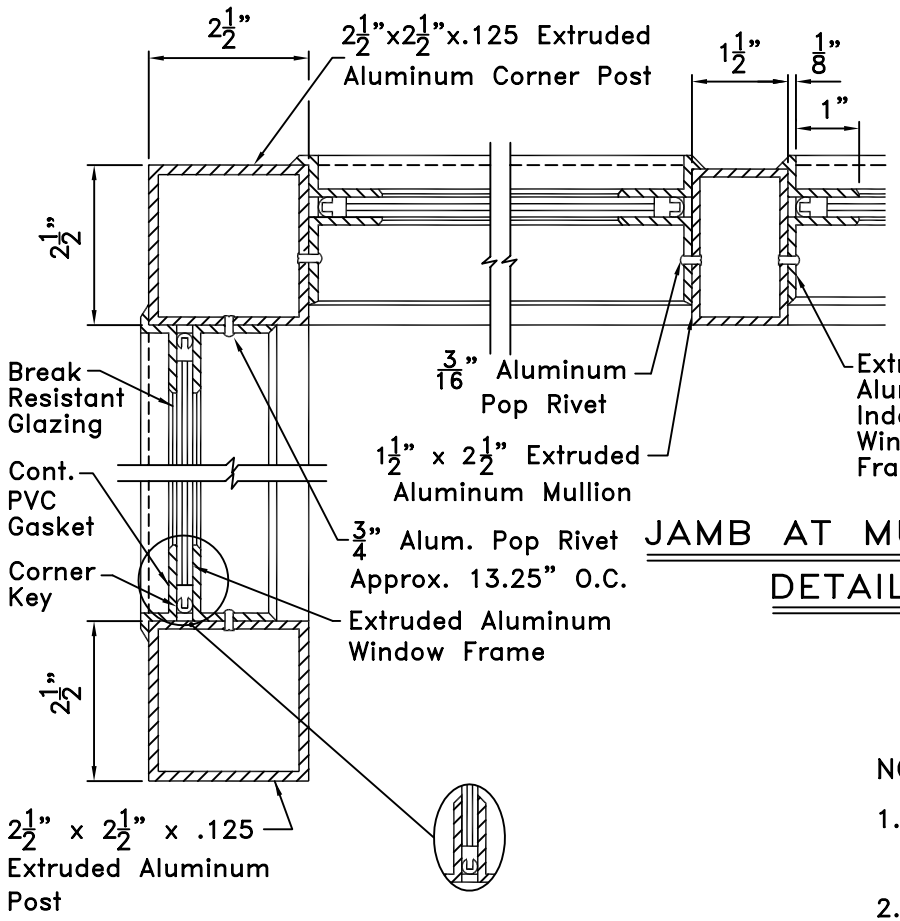

JAMB AT MULLION DETAIL

PVC GASKET DETAIL

JAMB AT POST DETAIL

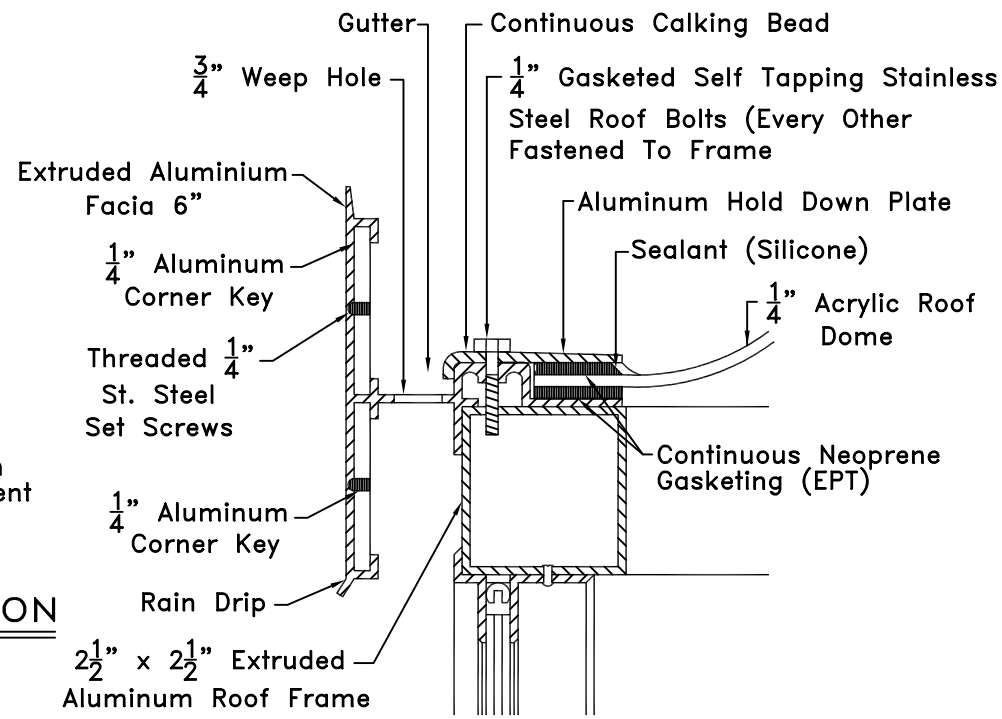

FACIA & ROOF DETAIL

NOTES:

1. Where Polycarbonate Windows Are Used, They Are Mounted In Extra Deep Gaskets And Window Frames With Up To ¾" Edge Engagement.
2. All Materials Manufactured By The Columbia Equipment Company, Inc., Jamaica, New York Or Approved Equal.
3. This Drawing May Not Be Reproduced In Whole Or In Part, In Any Form Or For Any Purpose Without Written Authorization From The Architect Or Columbia Equipment, Inc. Patented: US 3762109, US Design 222987

M-4a	DRAWN BY: KAT SCALE: NONE	REVISIONS:		BUS SHELTER DETAILS	CITY OF FREDERICK APPROVED 05-31-06 DATE

CAD

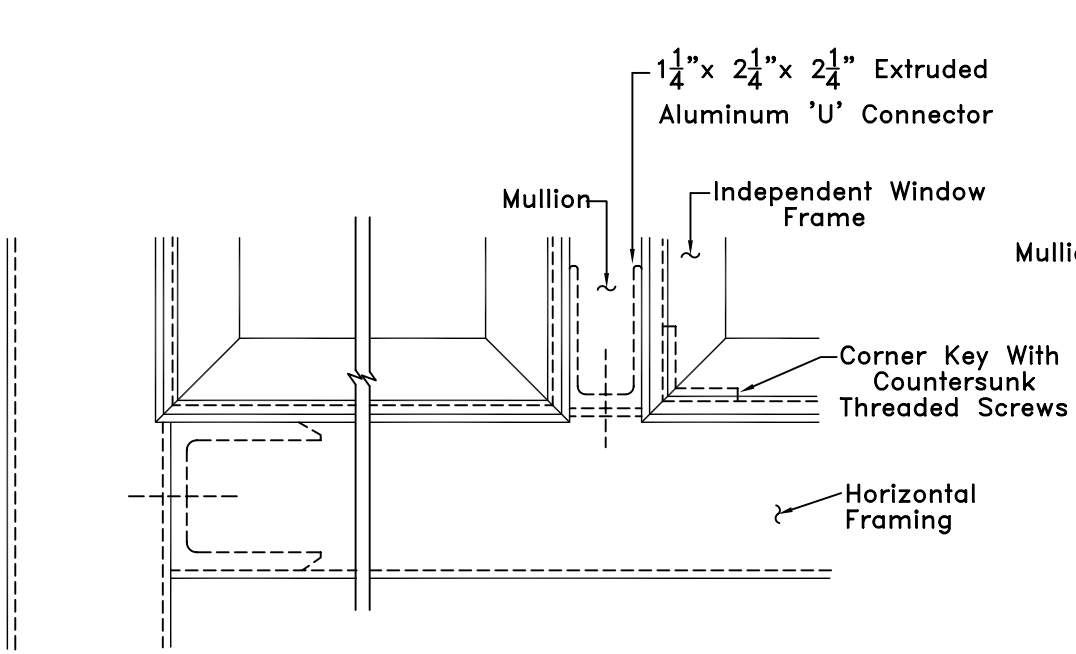

WINDOW CORNER & CONNECTIONS

ELEVATION DETAIL

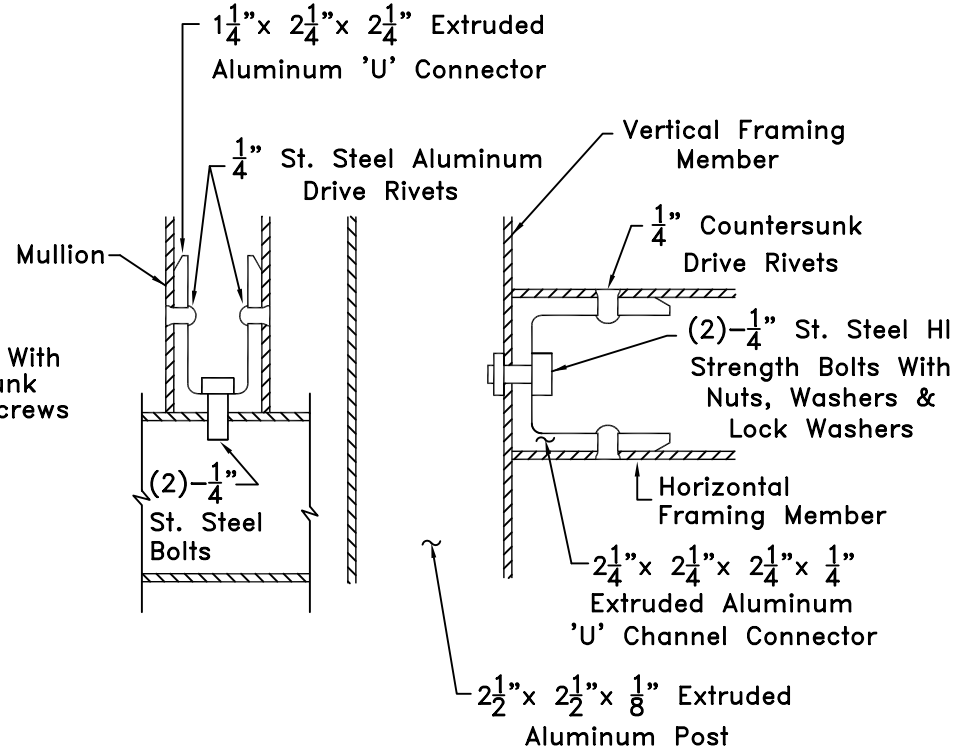

'U' CHANNEL FASTENERS

INTERNAL CONNECTION DETAILS

NOTES:

1. All Materials Manufactured By The Columbia Equipment Company Inc., Jamaica, New York Or Approved Equal.
2. This Drawing May Not Be Reproduced In Whole Or In Part, In Any Form Or For Any Purpose Without Written Authorization From The Architect Or Columbia Equipment Company, Inc. Patented: US 3762109, US Design 222987.

M–4b	DRAWN BY: KAT SCALE: NONE	REVISIONS:	BUS SHELTER DETAILS	CITY OF FREDERICK APPROVED	05–31–06 DATE

CAD